ashford
INSTRUCTIONS

ASHFORD SKEINER

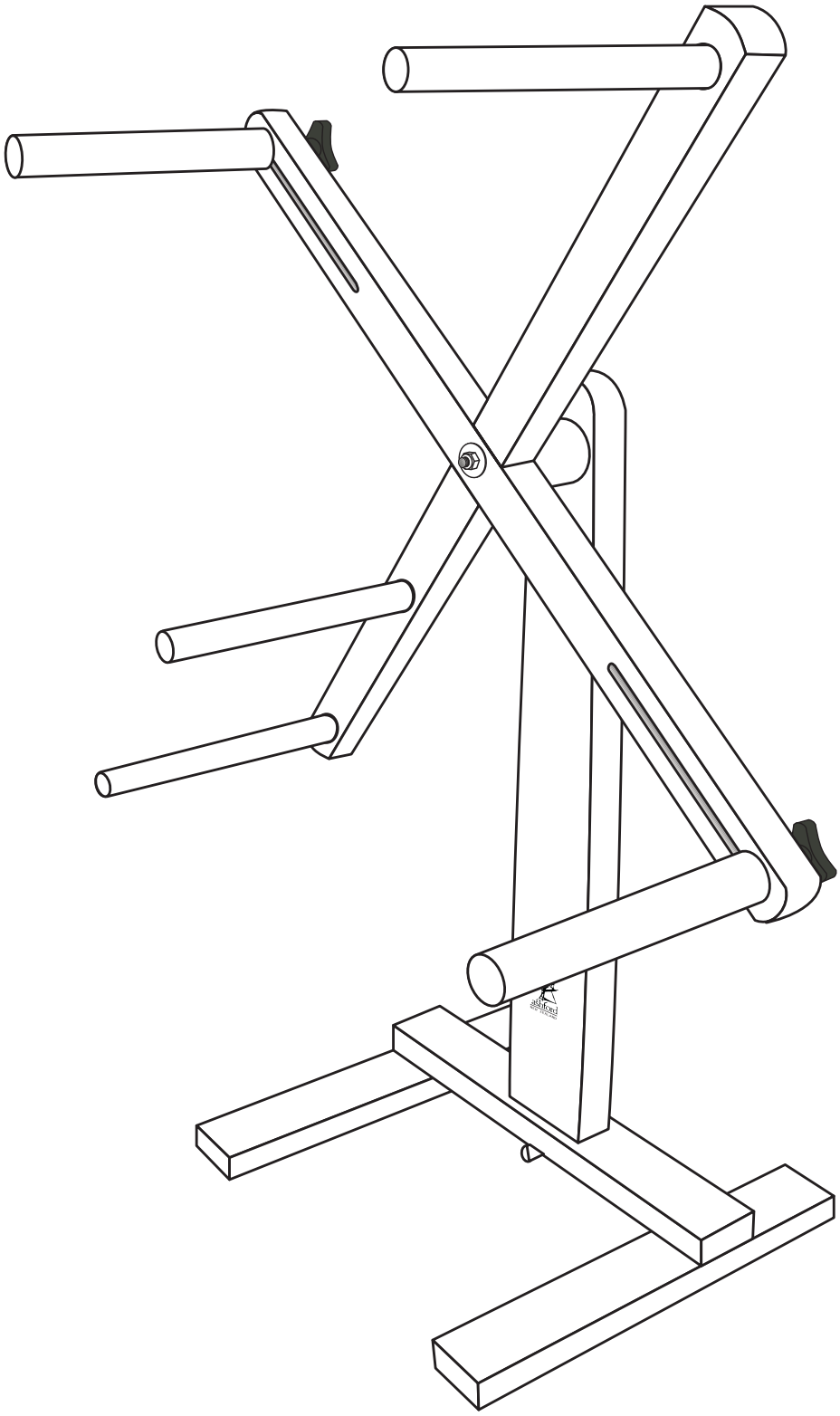

Ashford Handicrafts Ltd.
Factory and Showroom: 415 West Street,
PO Box 474, Ashburton, New Zealand
Telephone 64 3 308 9087
Facsimile 64 3 308 8664
Email: sales@ashford.co.nz
Internet: www.ashford.co.nz

Ashford Guarantee
Thank you for purchasing this Ashford product. In the unlikely event there is any fault in manufacture we will replace the item. To validate our guarantee please visit our website or write to us.
Please also join our Ashford Club for the Wheel Magazine, competitions and more at www.ashfordclub.co.nz

Tools Required:
Screwdriver⊕ , Hammer.

Assembly
Take the crossbar with 3 holes.
Apply a little glue to each hole and push the pegs in (hammer if necessary)
Assemble the rest of the skeiner using all the hardware.

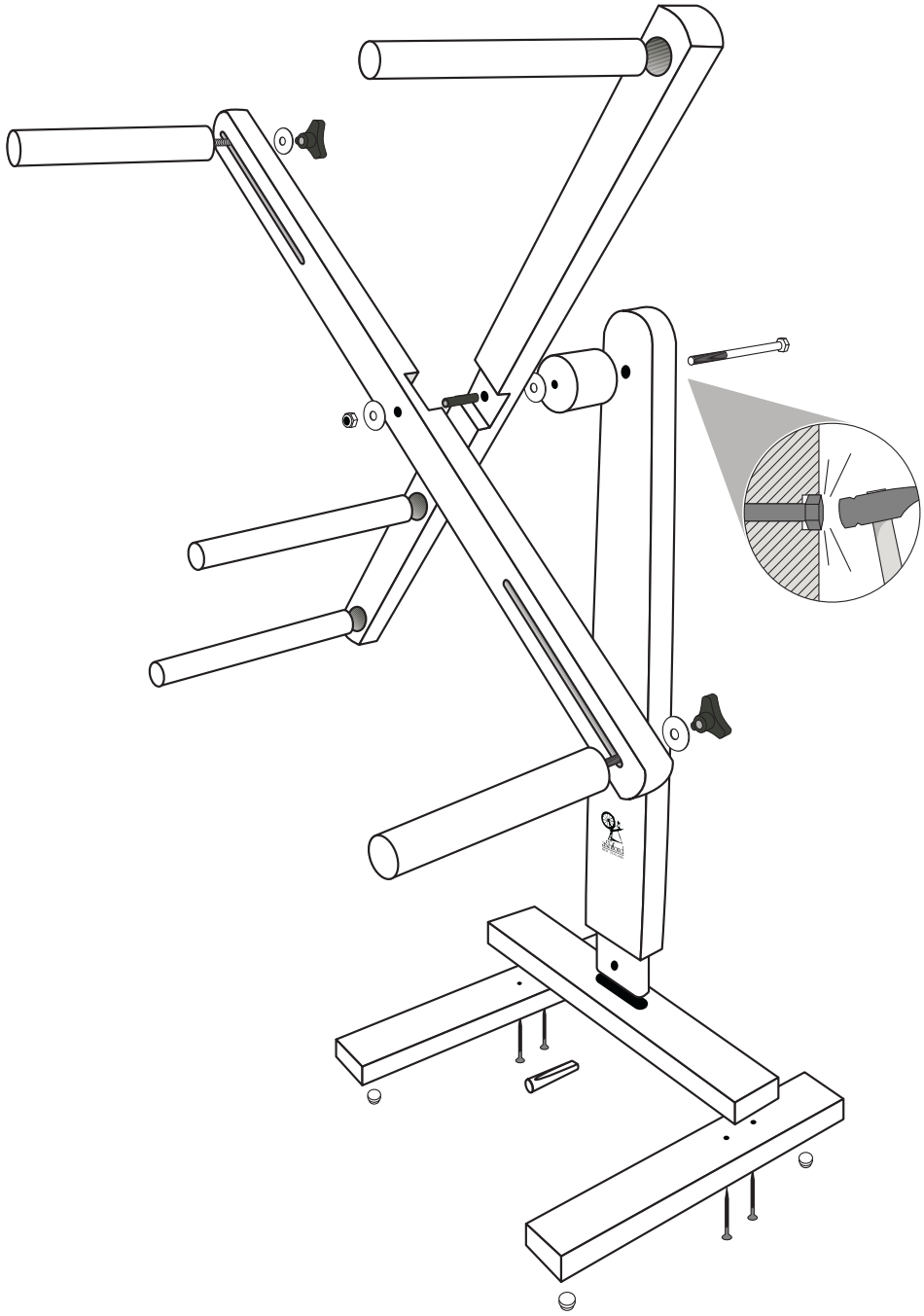

Skeiner use:
You can wind skeins of yarn directly from the spinning wheel bobbin.
After washing, place the skeins on the skeiner and wind onto your shuttle (weavers) or ball winder (knitters). The adjustable pegs allow for different sized hanks.
Your skeiner has been designed so you can easily take it apart for storage.

Finishing the wood:
We recommend the kiln dried silver beech timber be first sanded smooth and the corners removed using the enclosed sandpaper then sealed before assembly. This protects it from climatic changes and staining and enhances its character and beauty. Our natural Ashford Wax Finish is ideal for this purpose.