ashford
INSTRUCTIONS

4 to 8 SHAFT CONVERSION KIT

410MM / 610MM / 800MM

(16) (24) (32)

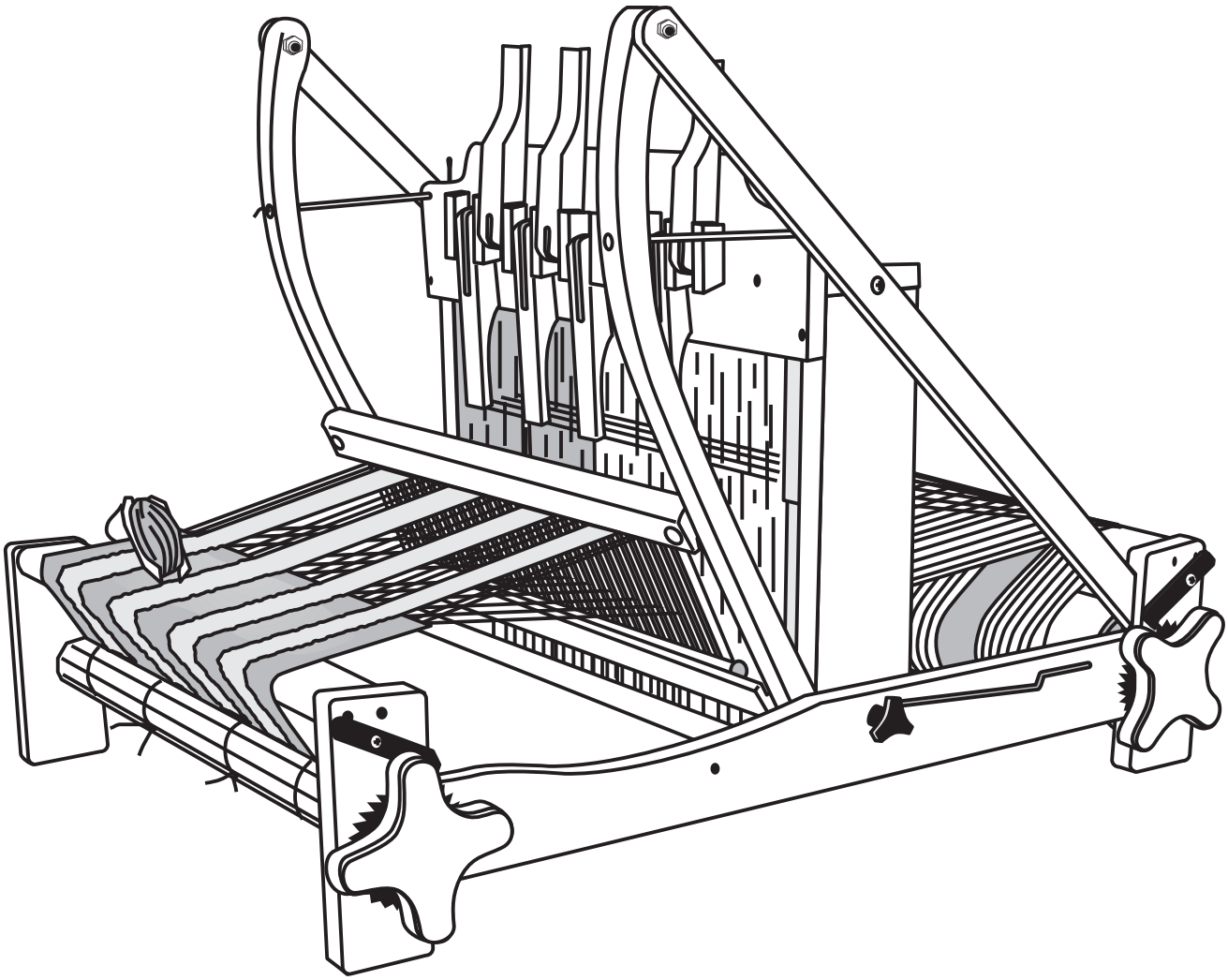

Ashford Handicrafts Ltd.
Factory and Showroom: 415 West Street,
PO Box 474, Ashburton, New Zealand
Telephone 64 3 308 9087
Facsimile 64 3 308 8664
Email: sales@ashford.co.nz
Internet: www.ashford.co.nz

Ashford Guarantee
Thank you for purchasing this Ashford product. In the unlikely event there is any fault in manufacture we will replace the item. To validate our guarantee please visit our website or write to us.
Please also join our Ashford Club for the Wheel Magazine, competitions and more at www.ashfordclub.co.nz

REAL SCALE HARDWARE.

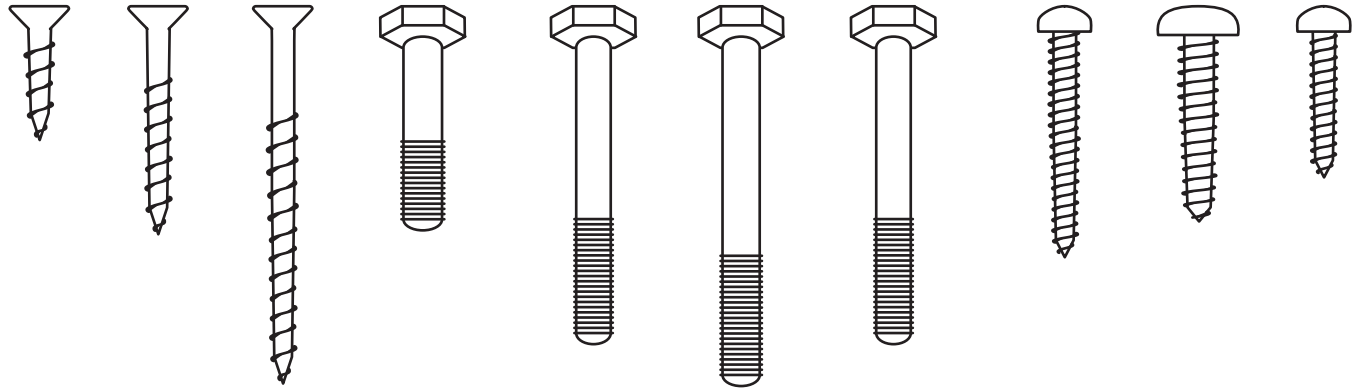

Please note we have now changed tri knob to round knob.

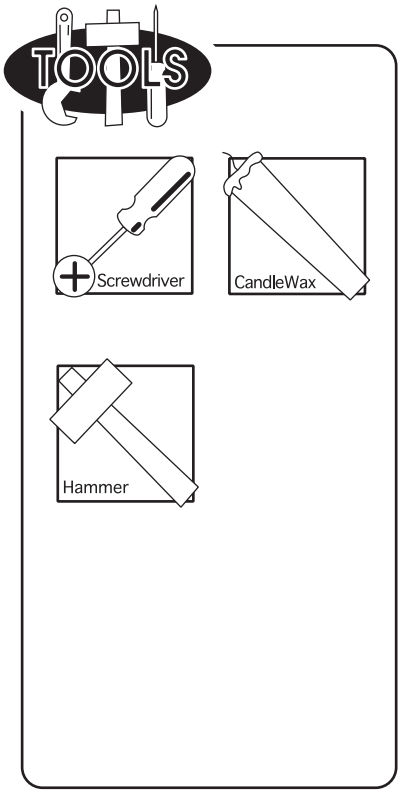

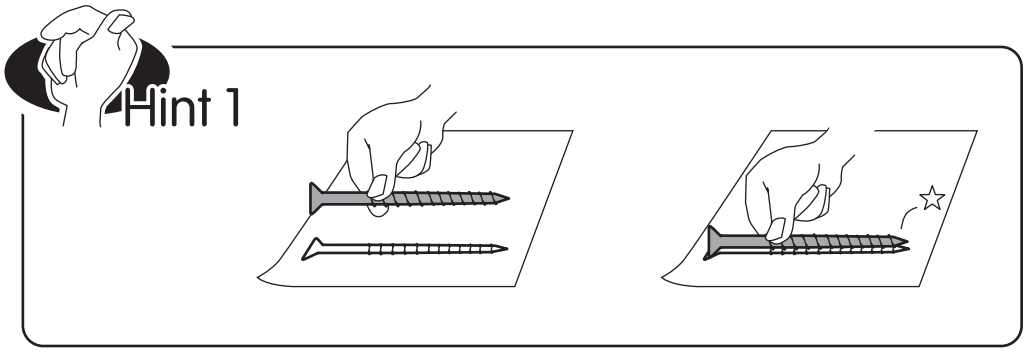

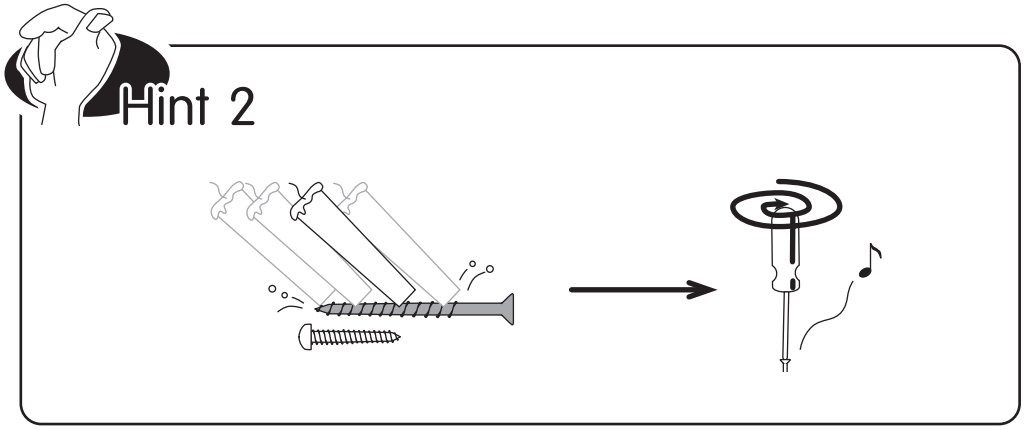

4 to 8 shaft conversion Kit

①

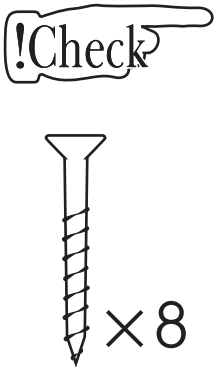

×8

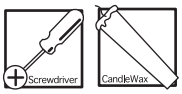

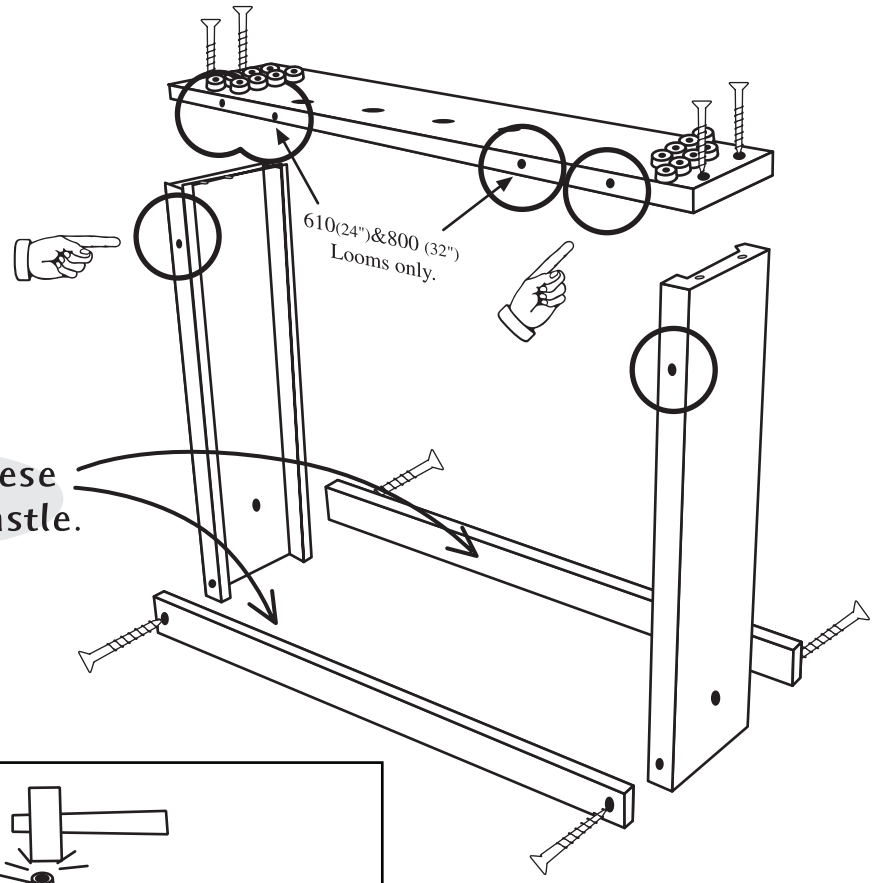

②

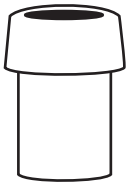

×8

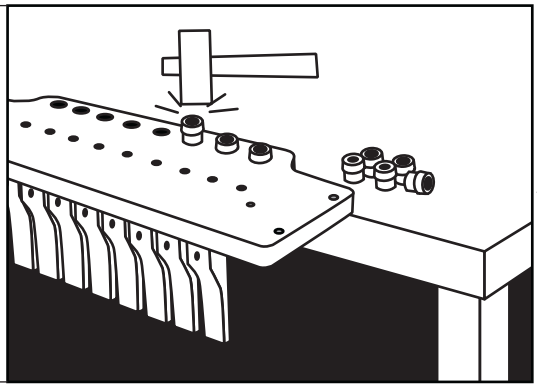

③

×4

410 mm(16") Loom

×6

610 (24") &800 mm (32")
Looms

×2

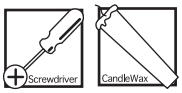

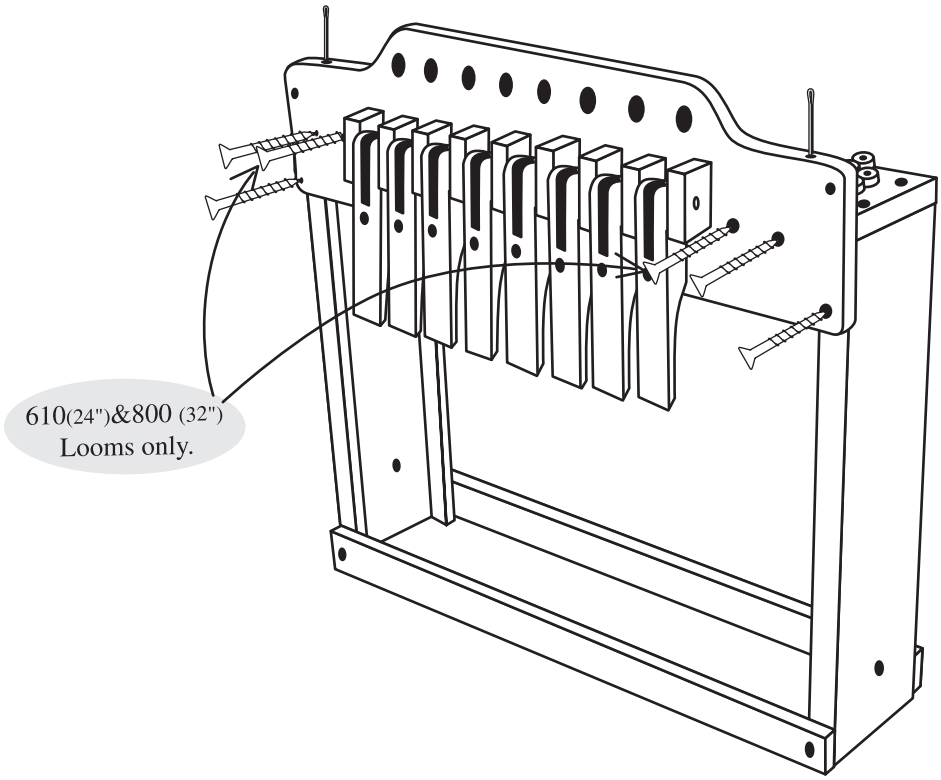

4

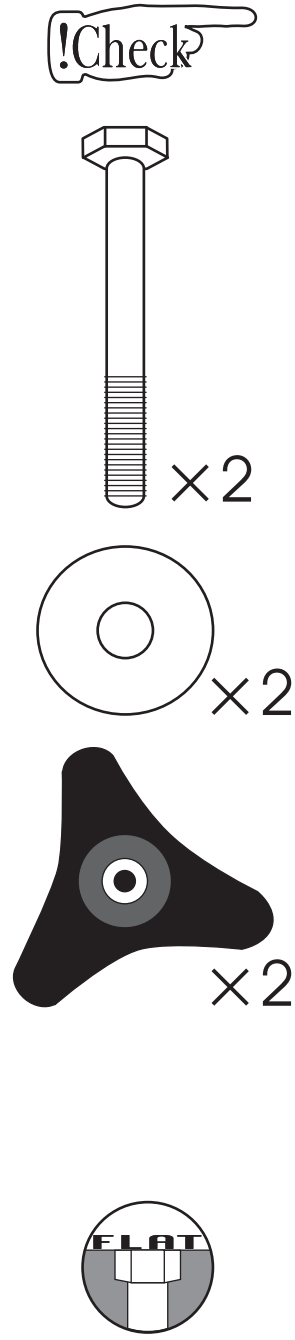

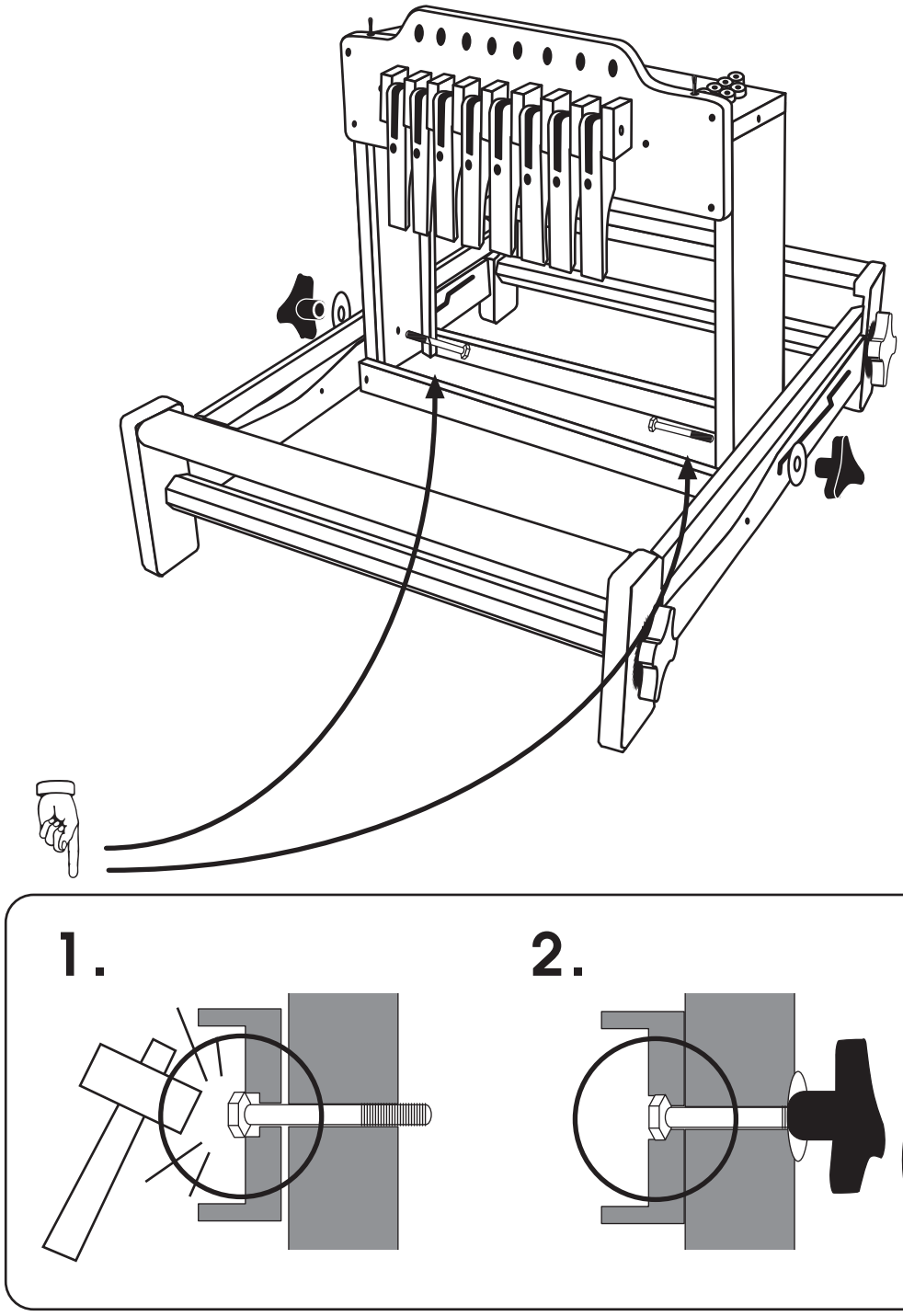

5

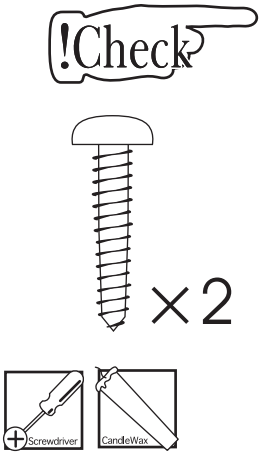

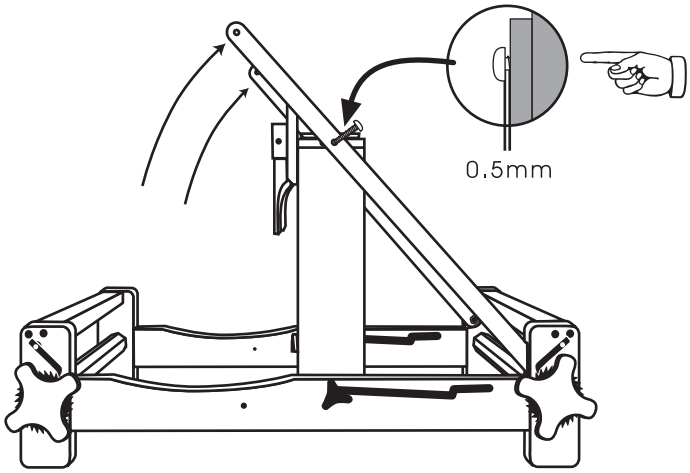

6

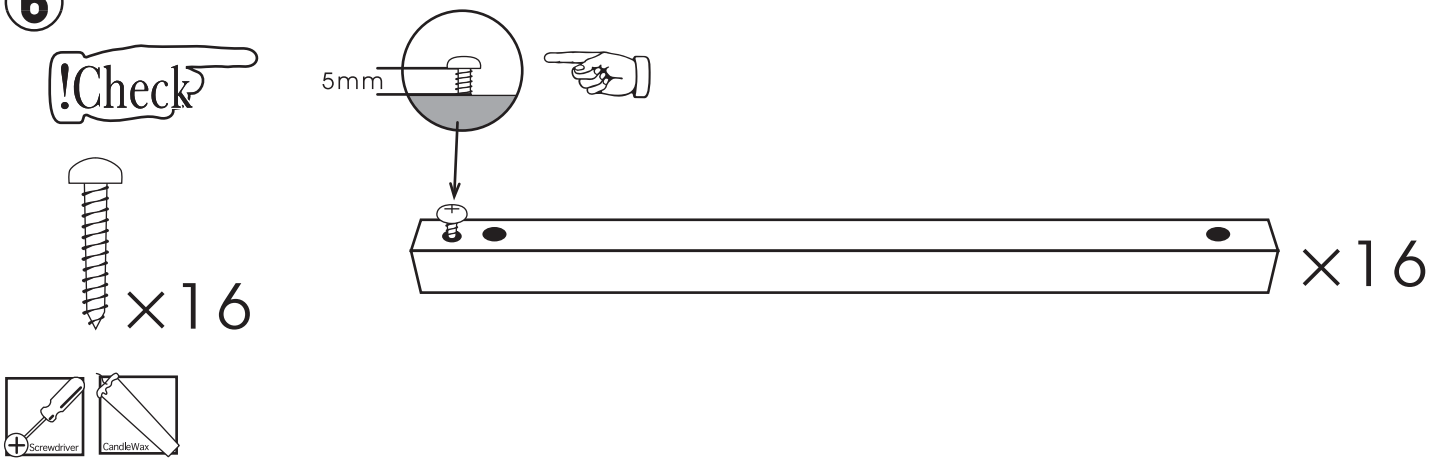
!Check
5mm
×16
×16
Screwdriver
CandleWax

7

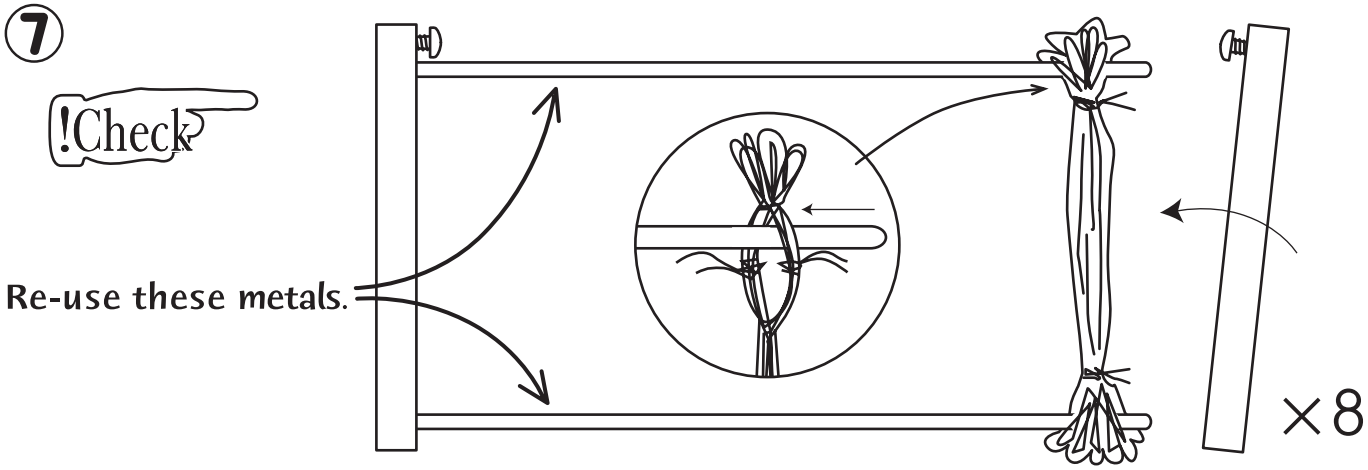
!Check
Re-use these metals.
×8

8

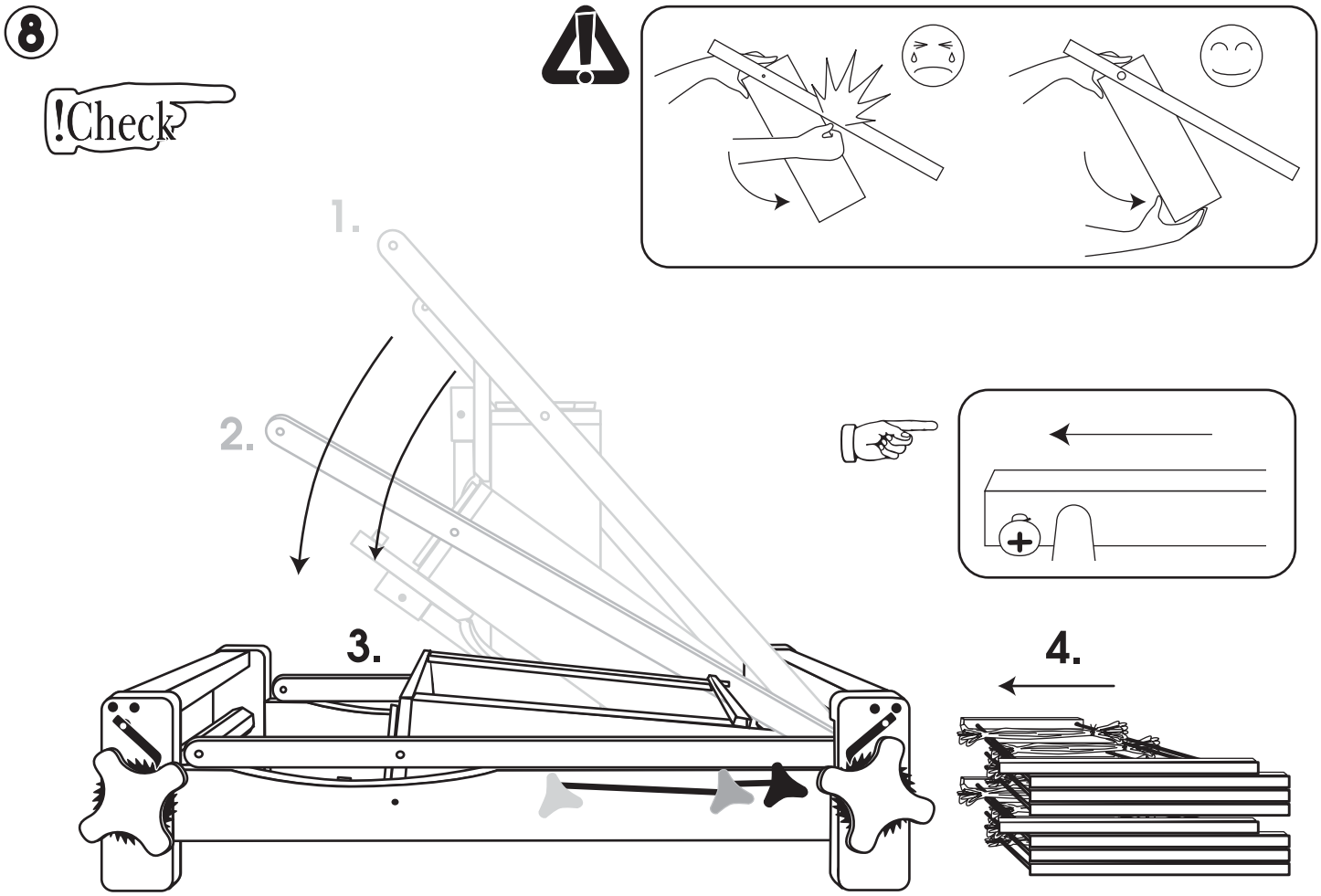
!Check
1.
2.
3.
4.

9

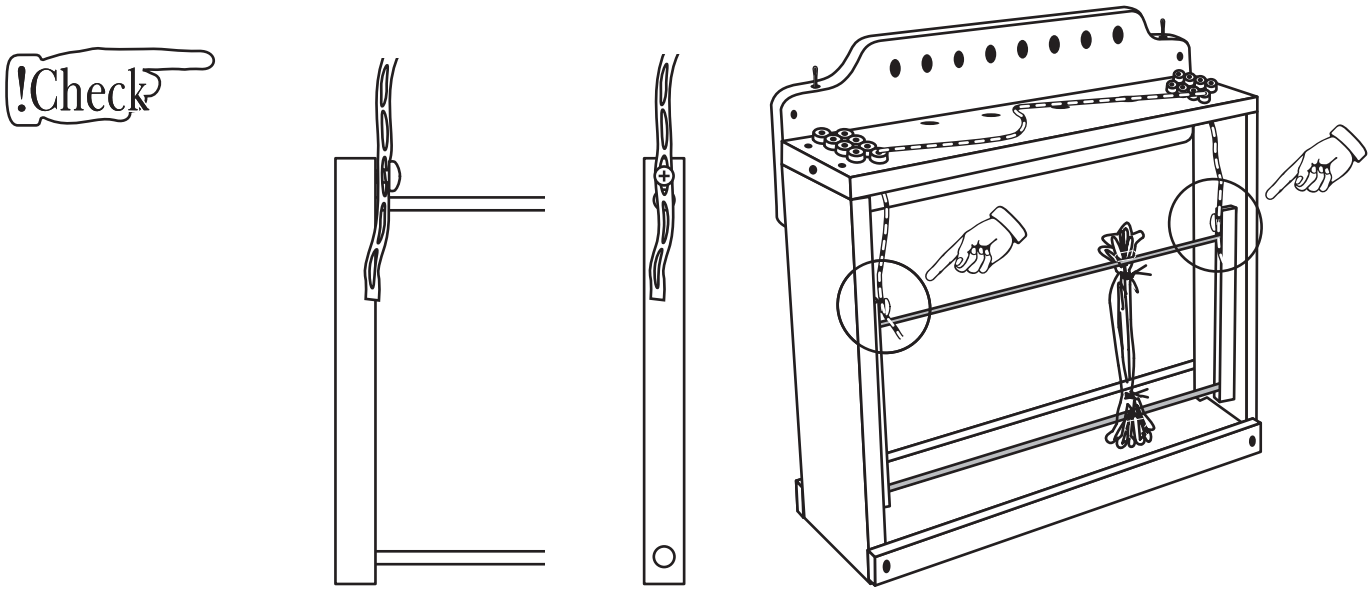

10

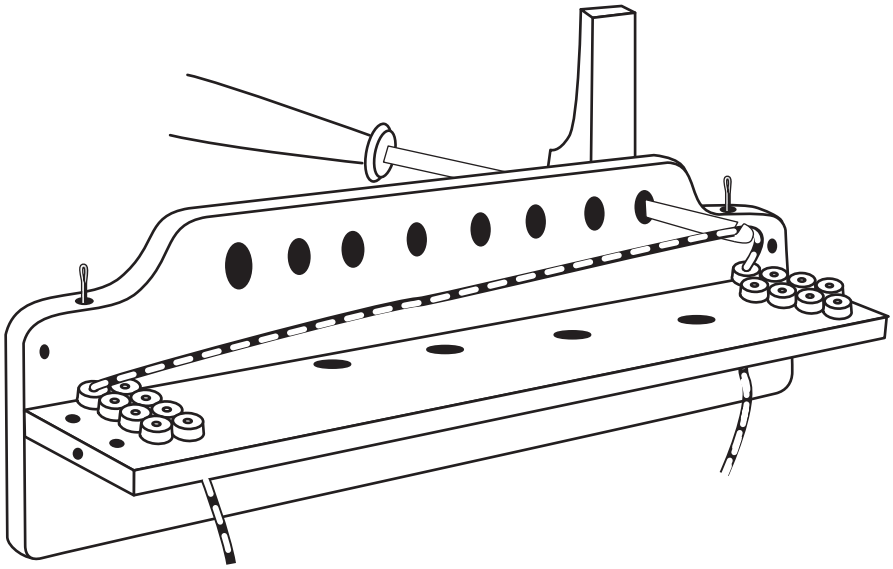

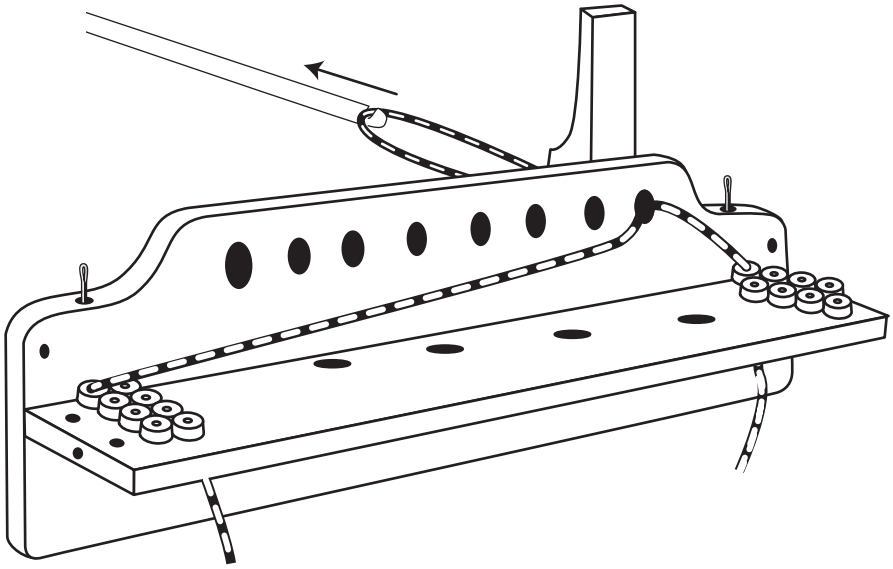

11

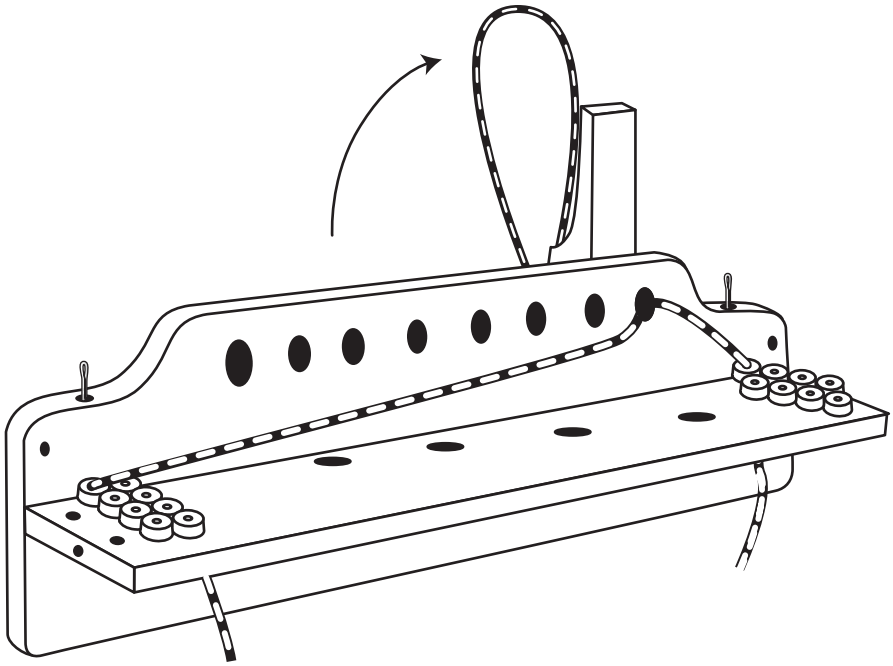

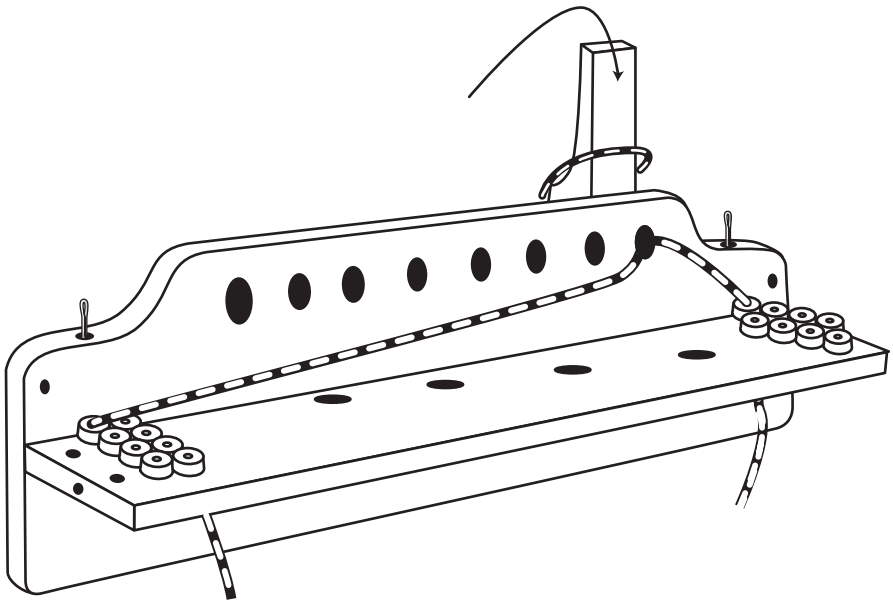
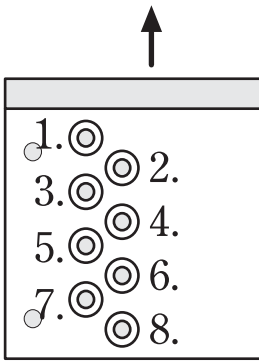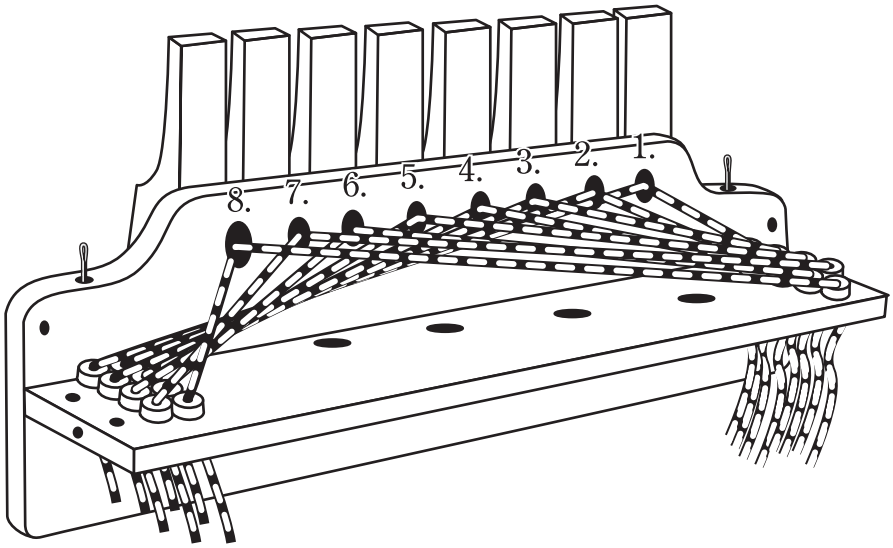
12