ashford
INSTRUCTIONS

SECOND BACK BEAM

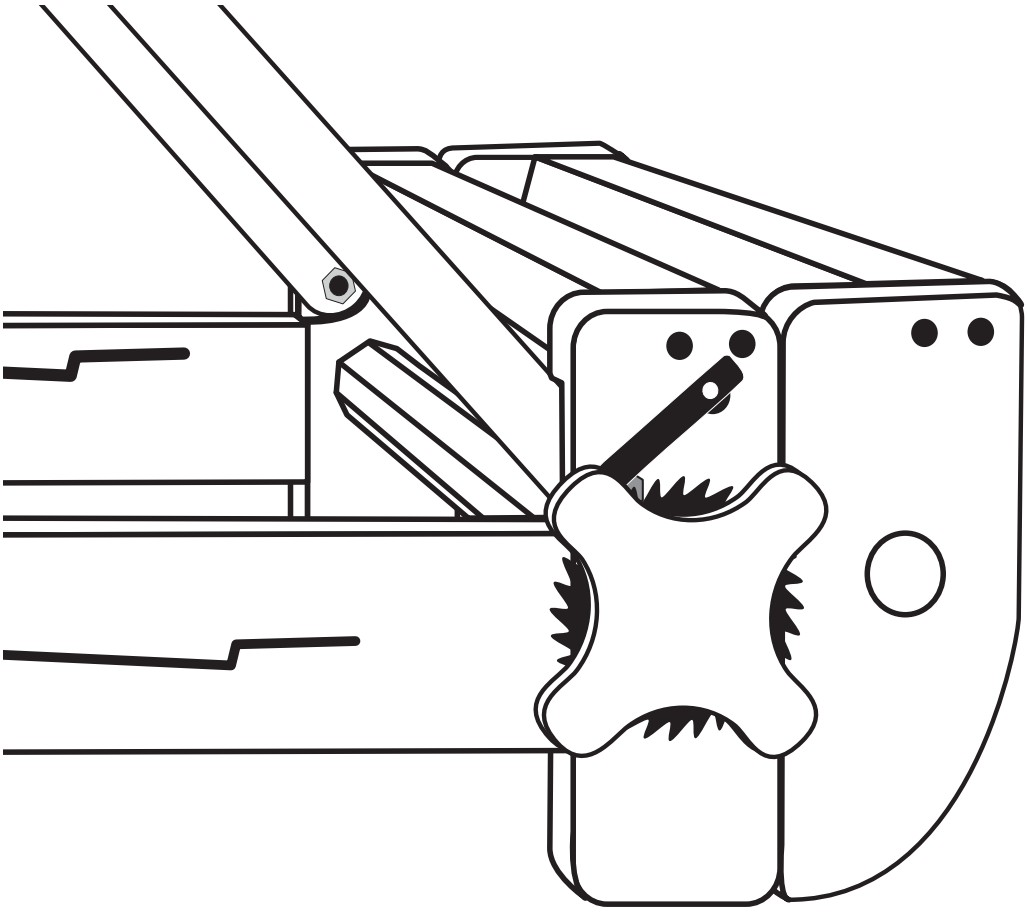

Ashford Handicrafts Ltd.
Factory and Showroom: 415 West Street,
PO Box 474, Ashburton, New Zealand
Telephone 64 3 308 9087
Facsimile 64 3 308 8664
Email: sales@ashford.co.nz
Internet: www.ashford.co.nz

Ashford Guarantee
Thank you for purchasing this Ashford product. In the unlikely event there is any fault in manufacture we will replace the item. To validate our guarantee please visit our website or write to us.
Please also join our Ashford Club for the Wheel Magazine, competitions and more at www.ashfordclub.co.nz

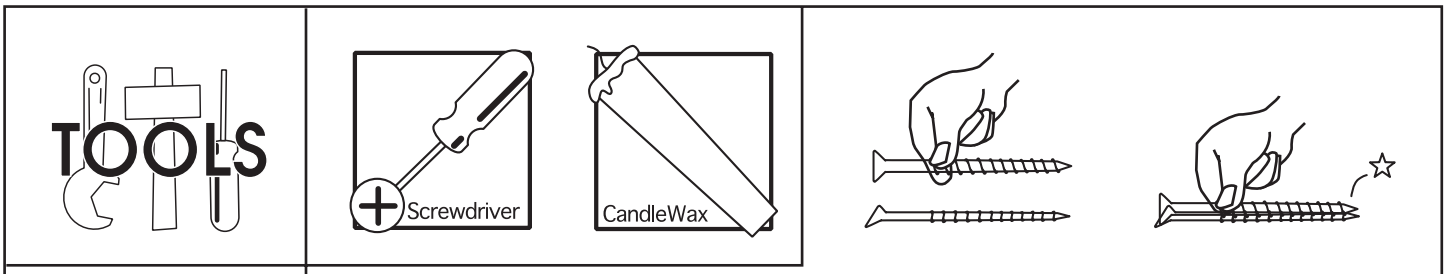
TOOLS
Screwdriver
CandleWax

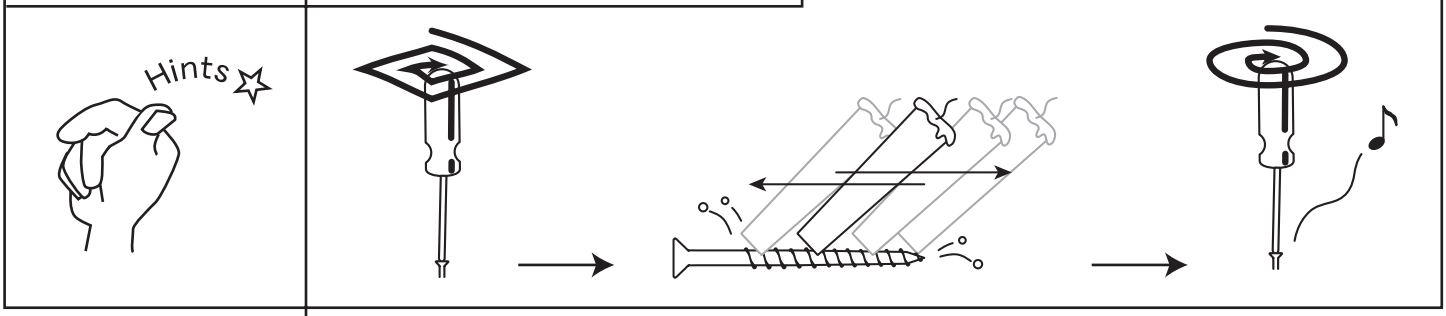
Hints

①

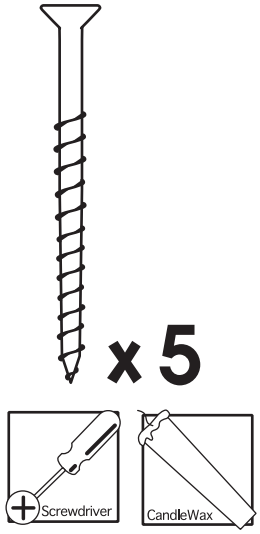
x 5
Screwdriver
CandleWax

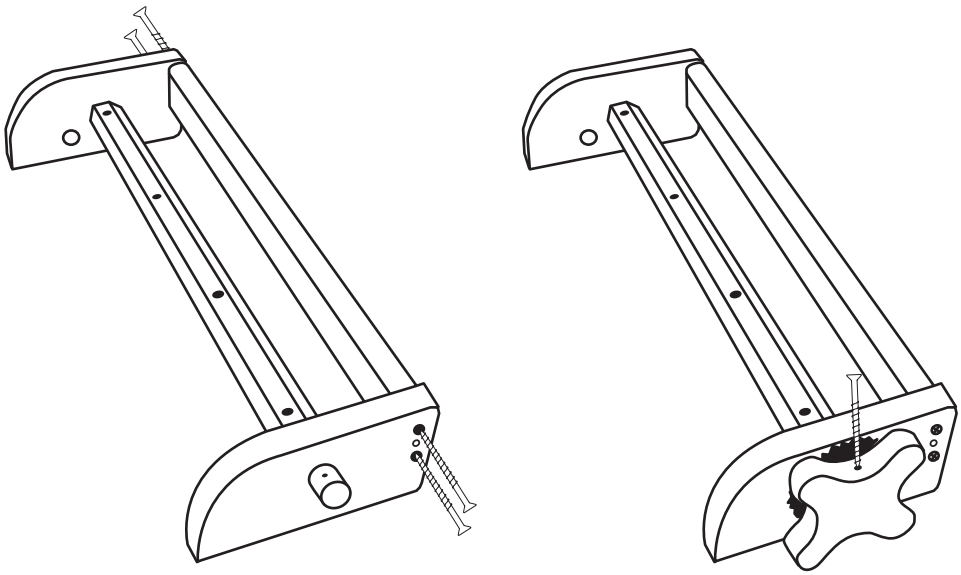

②

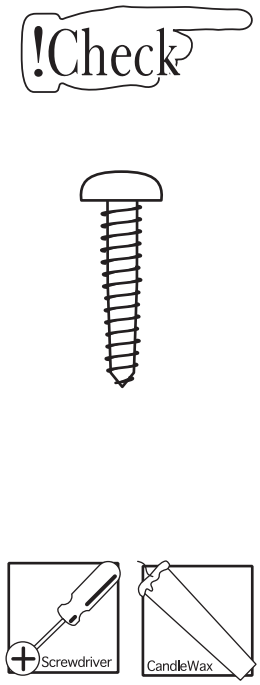
!Check
Screwdriver
CandleWax

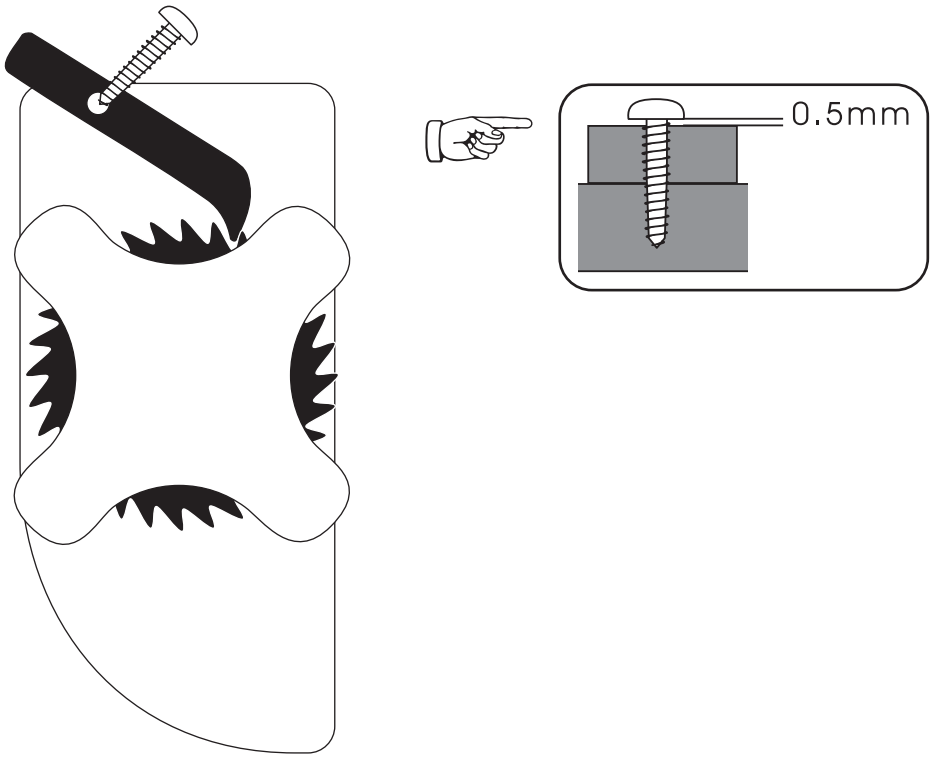
0.5mm

③

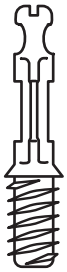

x 2

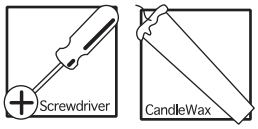

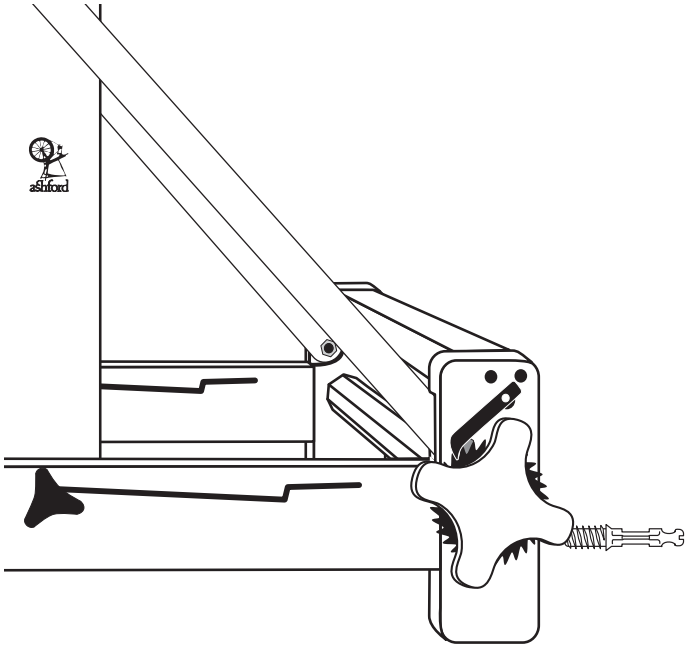

③'

For old looms

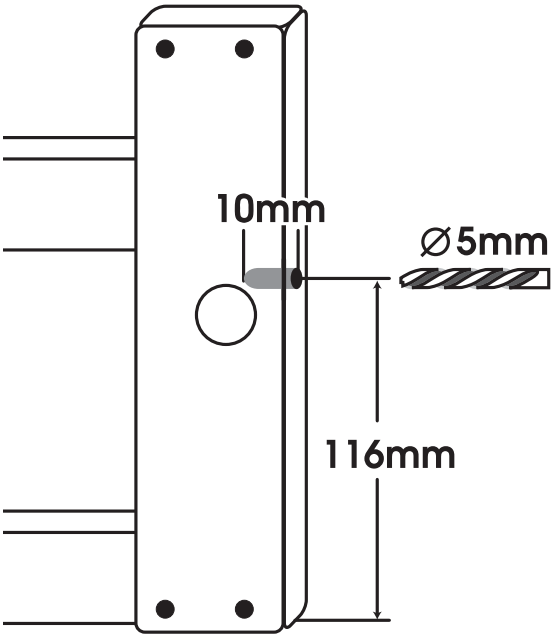

④

x 2

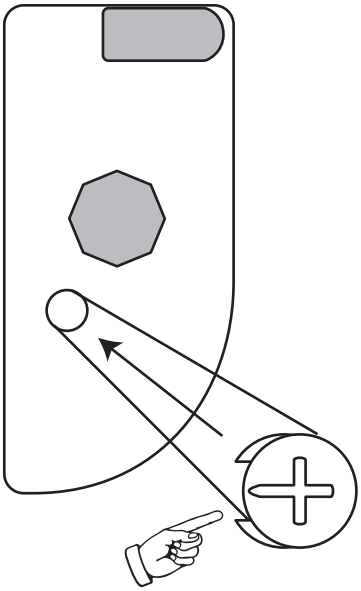

⑤

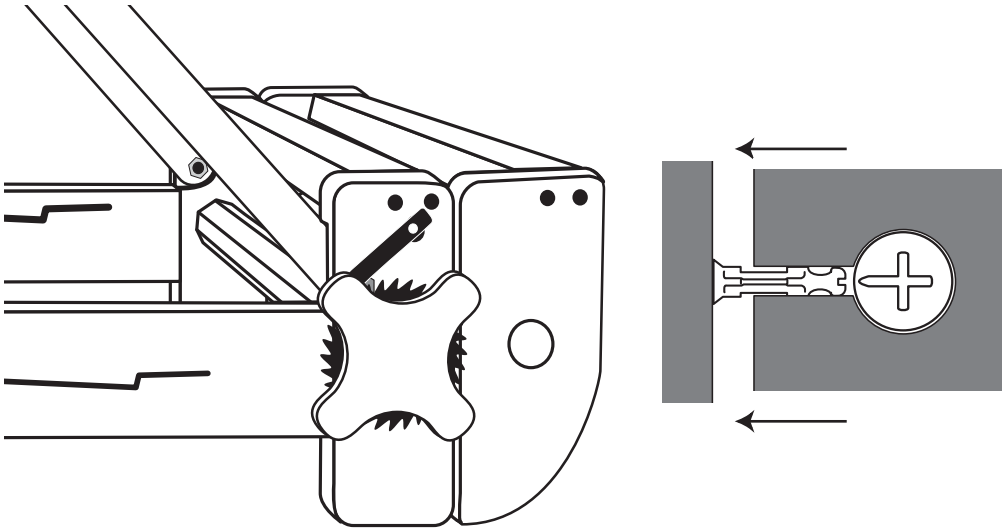

⑥

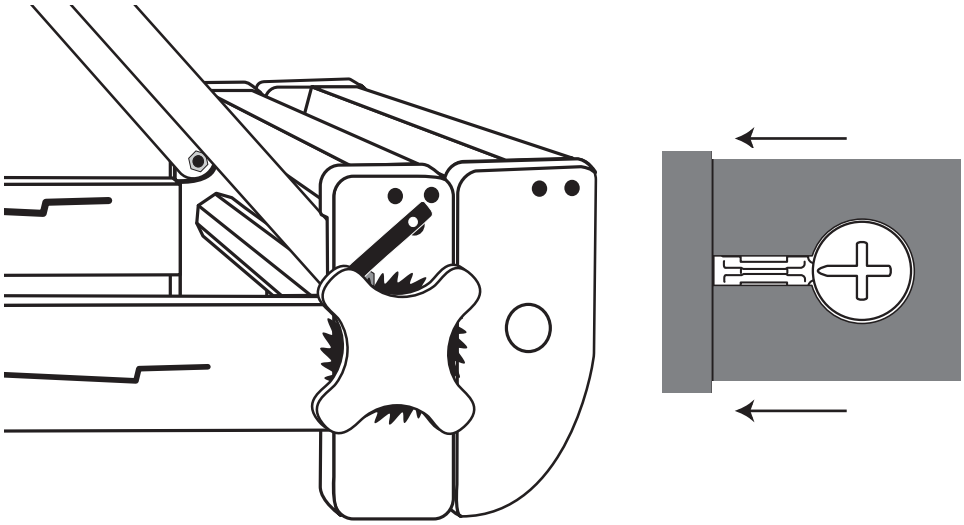
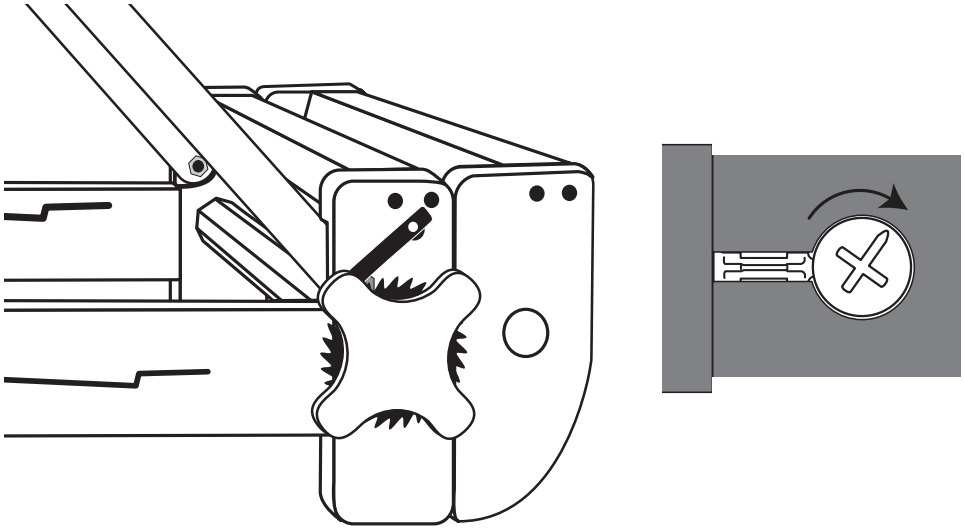
⑦