ashford
INSTRUCTIONS

SPINNING CHAIR

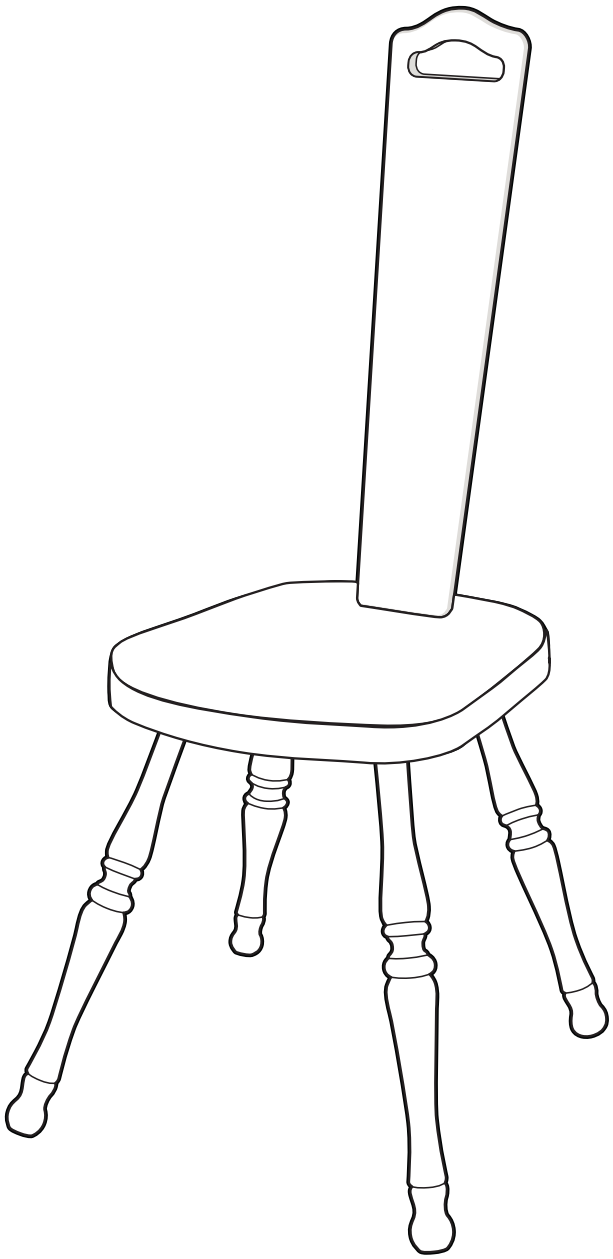

Ashford Handicrafts Ltd.
Factory and Showroom: 415 West Street,
PO Box 474, Ashburton, New Zealand
Telephone 64 3 308 9087
Facsimile 64 3 308 8664
Email: sales@ashford.co.nz
Internet: www.ashford.co.nz

Ashford Guarantee
Thank you for purchasing this Ashford product. In the unlikely event there is any fault in manufacture we will replace the item. To validate our guarantee please visit our website or write to us.
Please also join our Ashford Club for the Wheel Magazine, competitions and more at www.ashfordclub.co.nz

Before Commencing

Read the instructions completely, identify the parts and note the assembly sequence. Then use the fine sandpaper supplied to remove any sharp corners or edges.

Finishing the Wood

We recommend that the wood surfaces be waxed before assembly. This protects the kiln dried wood from climatic changes and enhances the beauty of the wood. Avoid waxing the dowel ends on the legs or holes.

For the Ultimate Finish

The Ashford Wax Finish will enhance the natural colours and beauty of the native New Zealand Silver Beech timber which has a lovely variety of colour and grain. Ashford Spinning chairs & wheels are also available factory finished in clear lacquer.

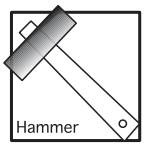

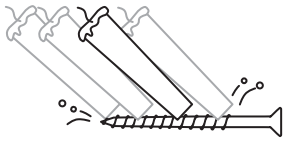

To make assembly easier use candle wax on the screws.

IMPORTANT

Wipe surplus glue away immediately with a damp cloth to prevent staining.

STEP 1

Apply glue sparingly to the dowel end of one leg and hole in the seat. Carefully hammer it in. Repeat for the other 3 legs and check to ensure legs sit evenly on the ground. If necessary use the sandpaper supplied to remove high spots on 2 legs.

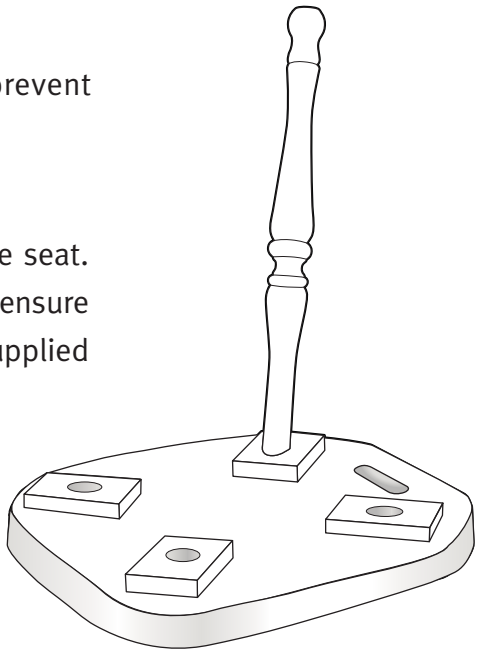

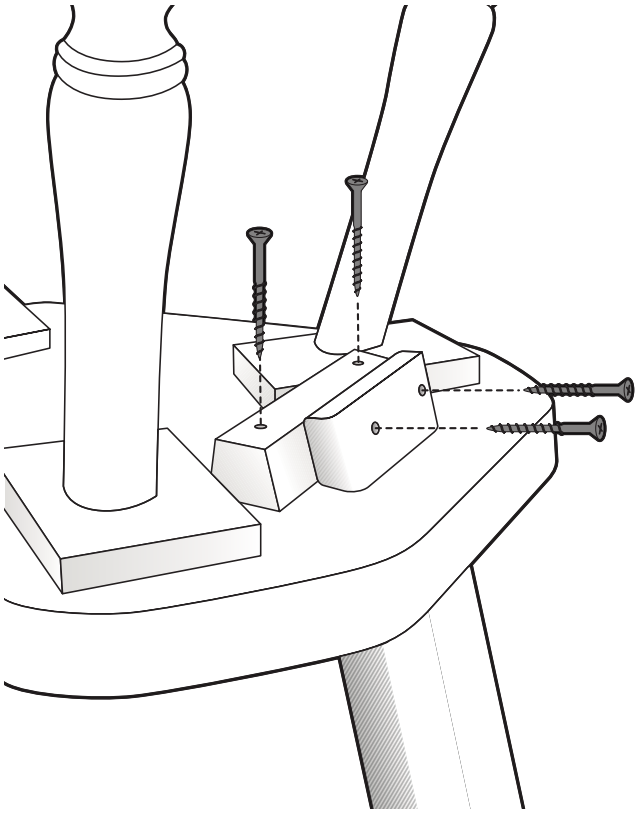

STEP 2

Push the seat back firmly through the slot in the seat.

STEP 3

Attach the wooden block to the seat with glue and **long** screws.

STEP 4

Attach the seat back to the wooden block with the **short** screws.

STEP 5

Allow glue to harden overnight before use with your Ashford spinning wheel.