ashford
INSTRUCTIONS

SLIDING HOOK FLYER
- Single Drive -

For Traditional & Traveller single drive spinning wheels

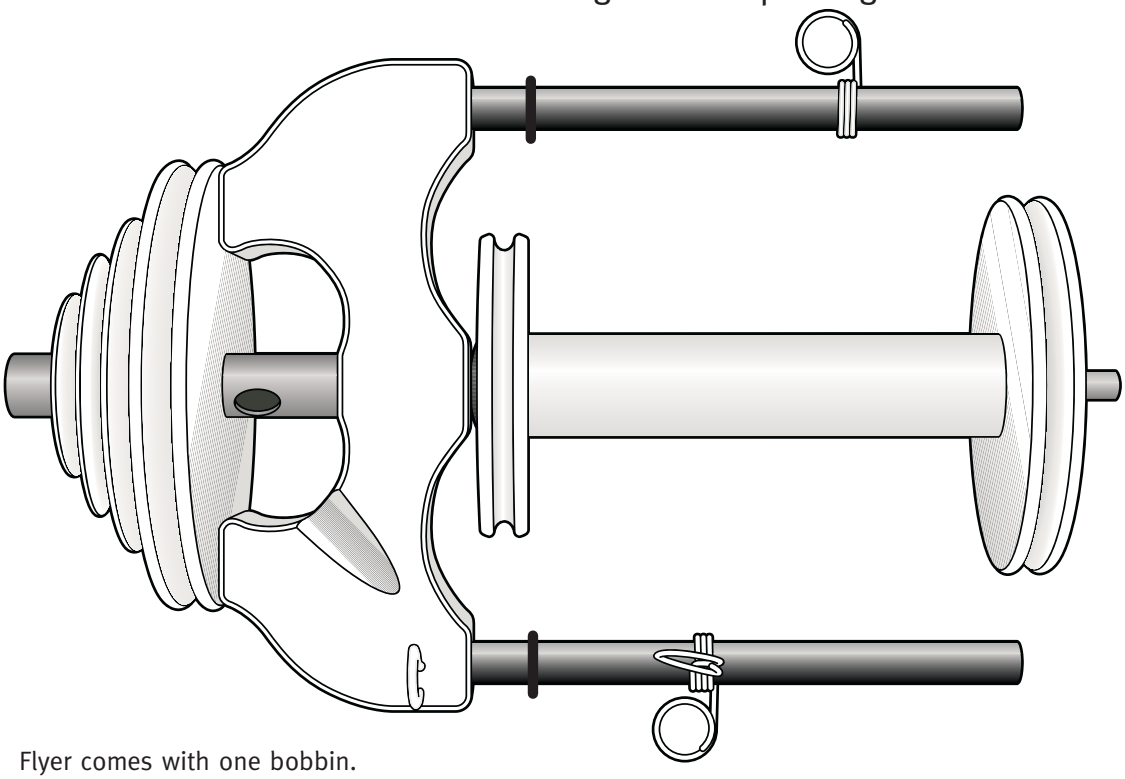

- Flyer comes with one bobbin.
- Fill your bobbins evenly with the squeeze and slide stainless steel yarn guides.
- Graphite - fibreglass arms result in a light and strong flyer.
- The 4 speed pulley allows a wide range of yarns to be spun.

Ratios

Traditional	6.5	9.0	12.0	18.0	:1
Traveller	5.5	7.5	10.0	15.0	:1

Wood finish

We recommend the wood be sealed with a wax or oil finish before use to protect and enhance it's natural beauty. Ashford wax polish is ideal for this purpose.

1. Thread the 2 hooks into the pilot holes in the flyer base.
2. Slide the rubber O-rings onto the flyer arms until opposite the small bobbin end.
3. Squeeze and slide the stainless steel yarn guides onto the flyer arms.
4. Apply a drop of oil to the flyer spindle and slide the bobbin on. Ashford spinning wheel oil is ideal for this purpose.
5. Locate the flyer between the flyer bearings, fit the drive and brake bands and apply a drop of oil to the flyer bearings.
6. Attach the threading hook to your spinning wheel with the cotton tape.
7. Tie a leader yarn approx. 1.5m / 5' to the bobbin centre and feed it through the yarn guide, around the flyer hook and through the orifice.
8. As your bobbin fills, squeeze and slide the yarn guide to fill your bobbin evenly.

Happy Spinning!

Ashford Handicrafts Ltd.
Factory and Showroom: 415 West Street,
PO Box 474, Ashburton, New Zealand
Telephone 64 3 308 9087
Facsimile 64 3 308 8664
Email: sales@ashford.co.nz
Internet: www.ashford.co.nz

Ashford Guarantee
Thank you for purchasing this Ashford product. In the unlikely event there is any fault in manufacture we will replace the item. To validate our guarantee please visit our website or write to us.
Please also join our Ashford Club for the Wheel Magazine, competitions and more at www.ashfordclub.co.nz

SHF16102008V1