ASSEMBLY INSTRUCTIONS FOR THE ASHFORD TRAVELLER SPINNING WHEEL

- Single Drive -

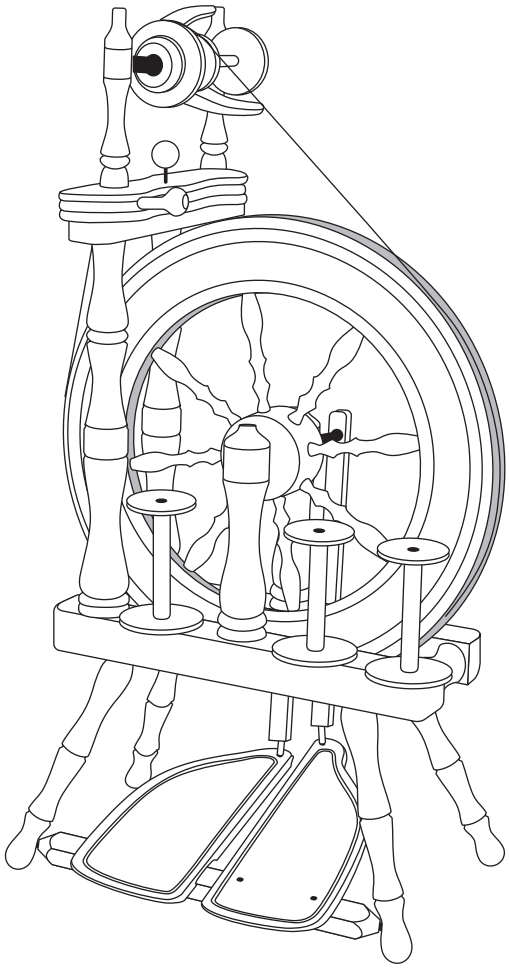

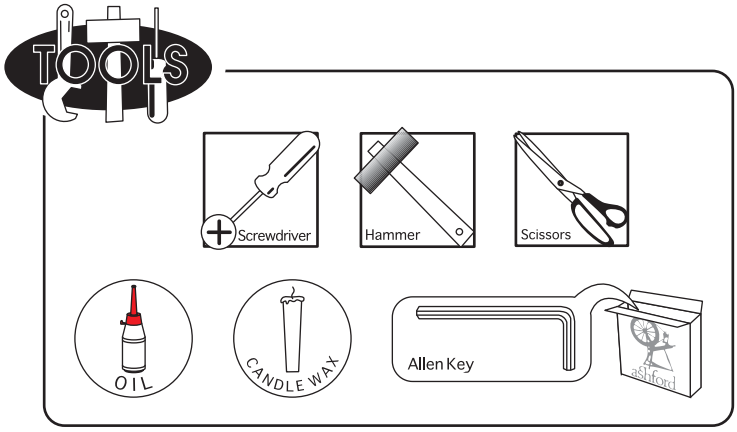

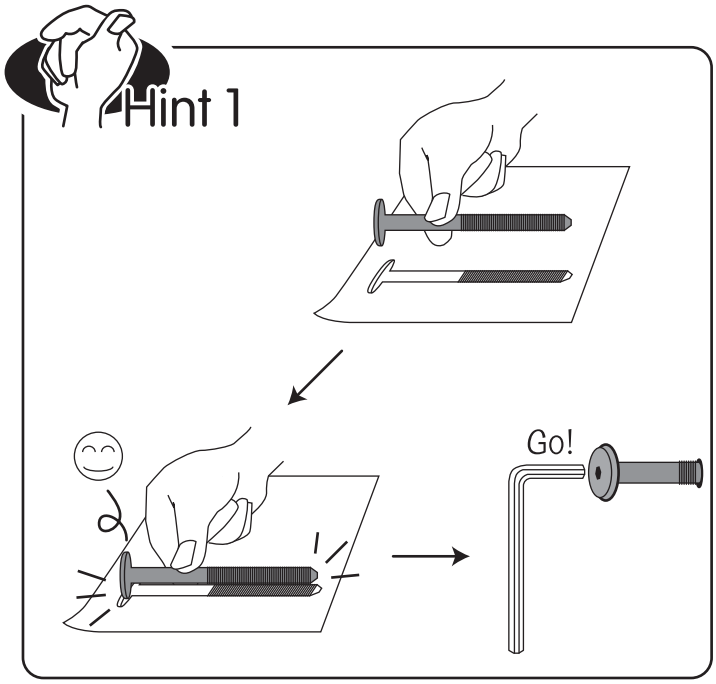

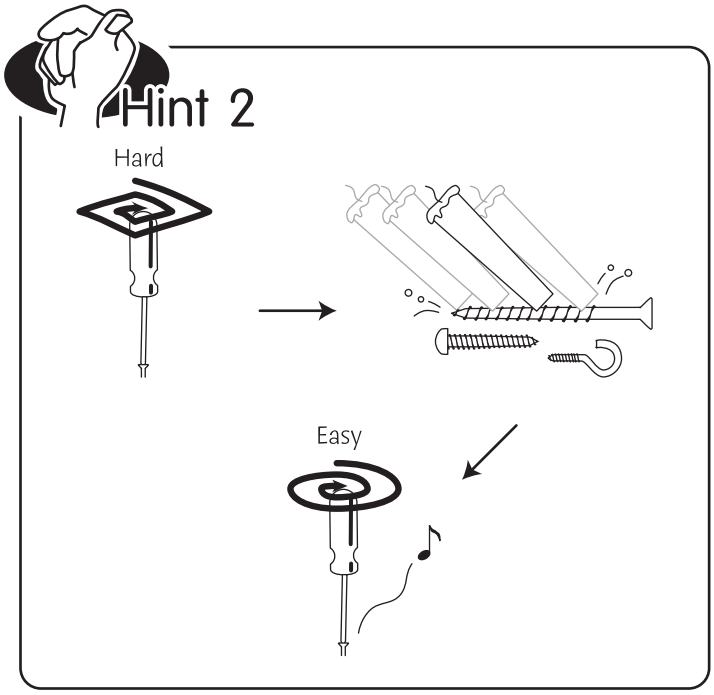

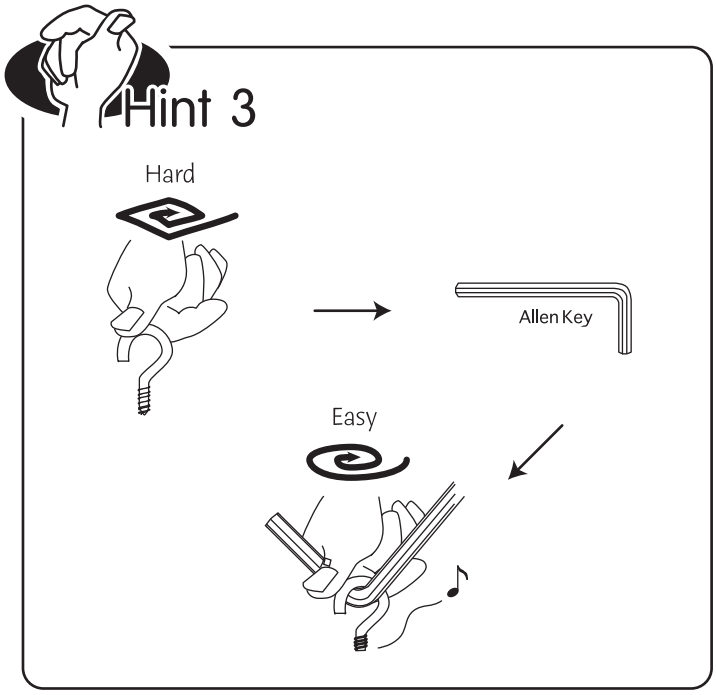

1

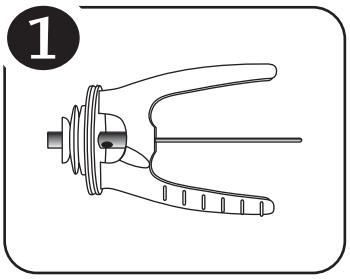

CANDLE WAX

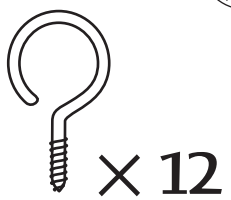
× 12

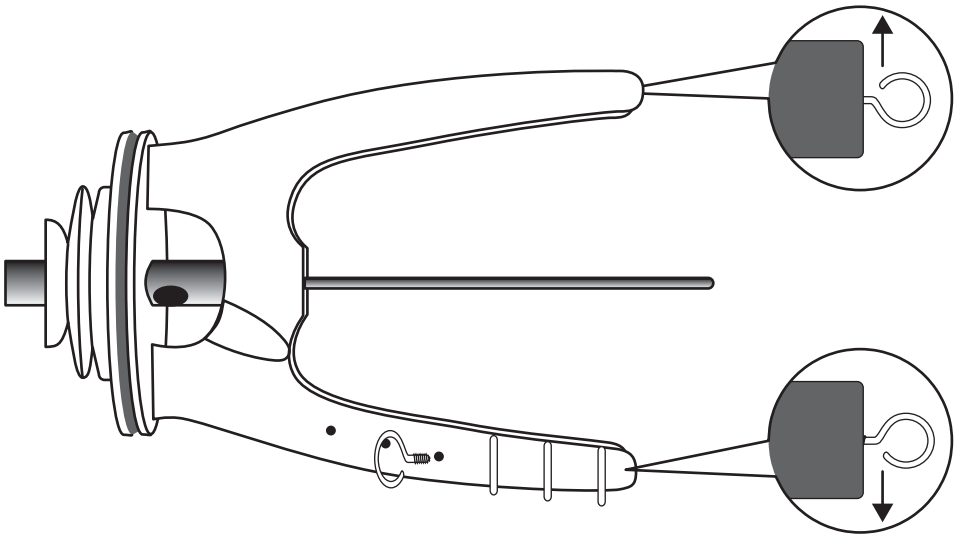

2

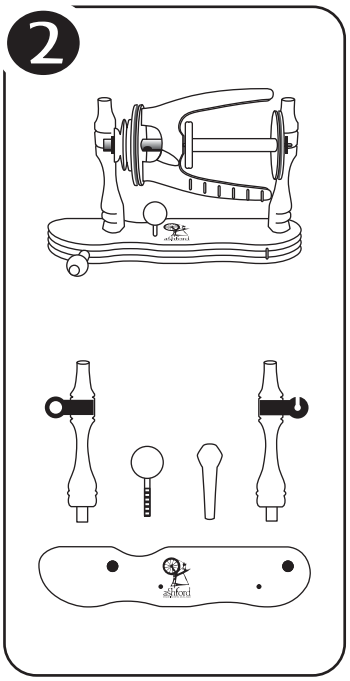

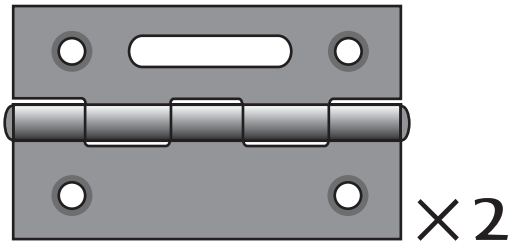
× 2

CANDLE WAX
Screwdriver

× 4

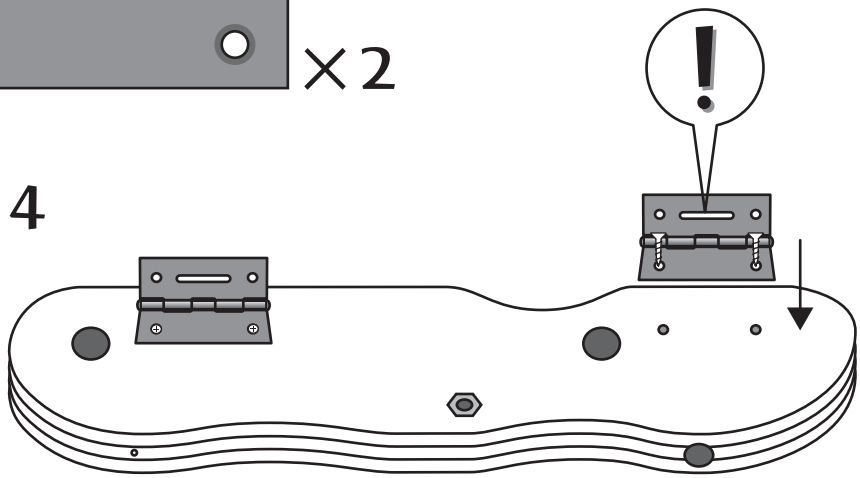

3

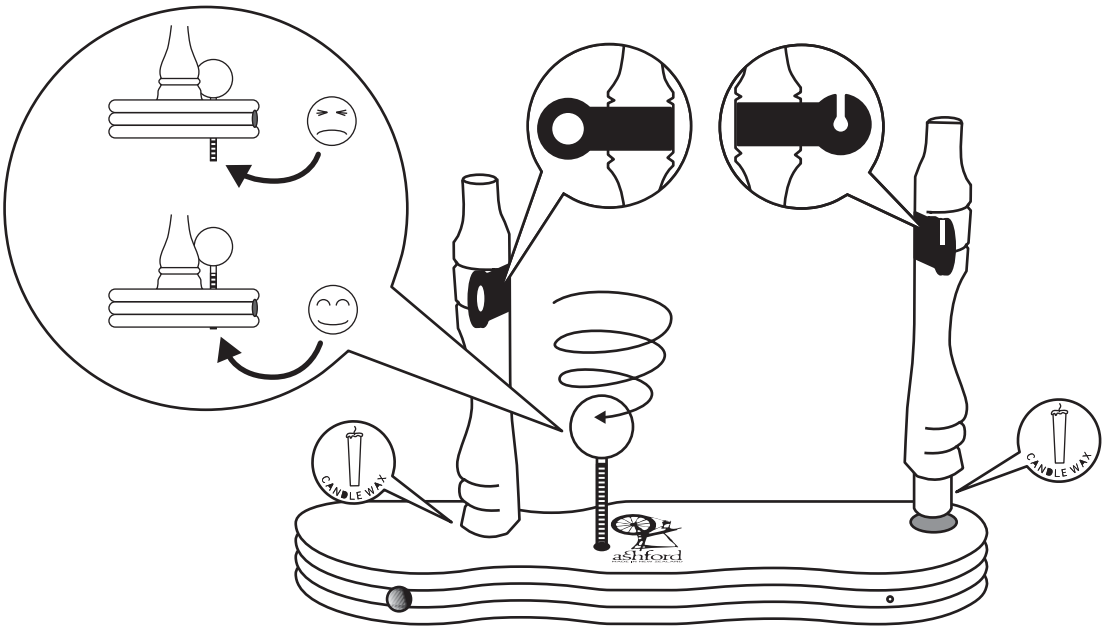
CANDLE WAX
CANDLE WAX

4

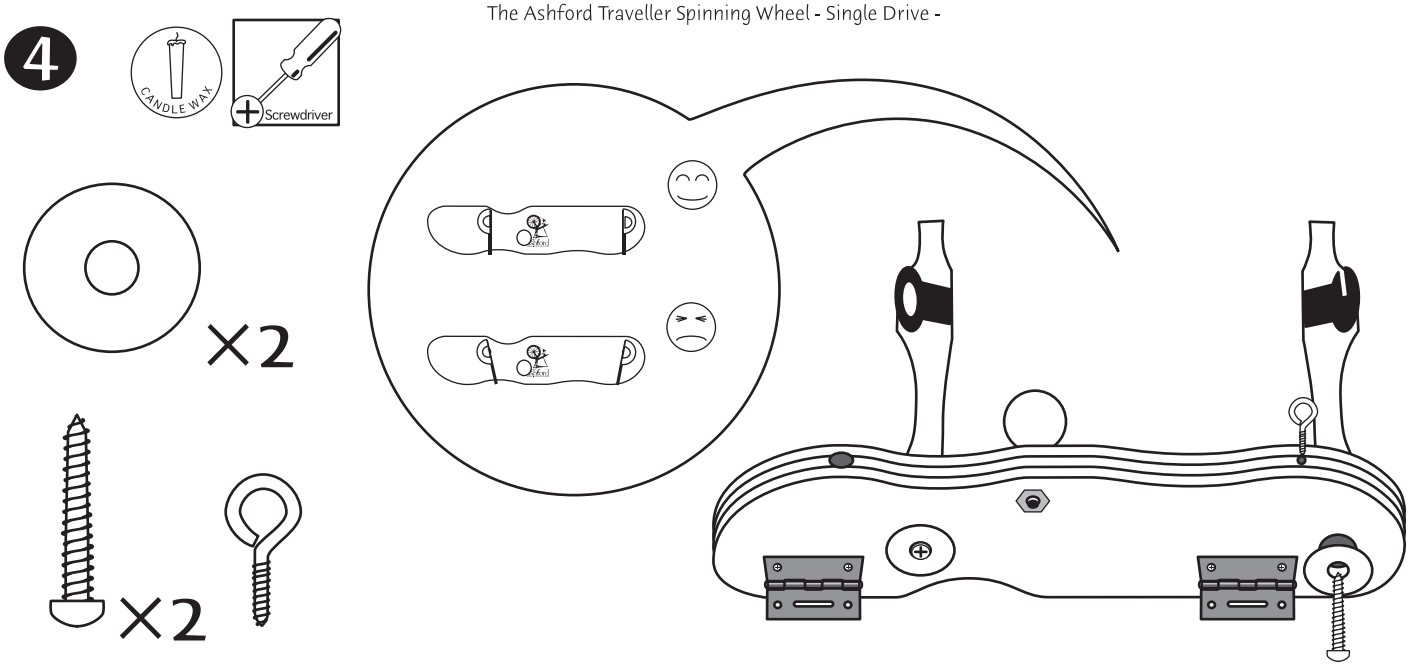
CANDLE WAX
Screwdriver
×2
×2

5

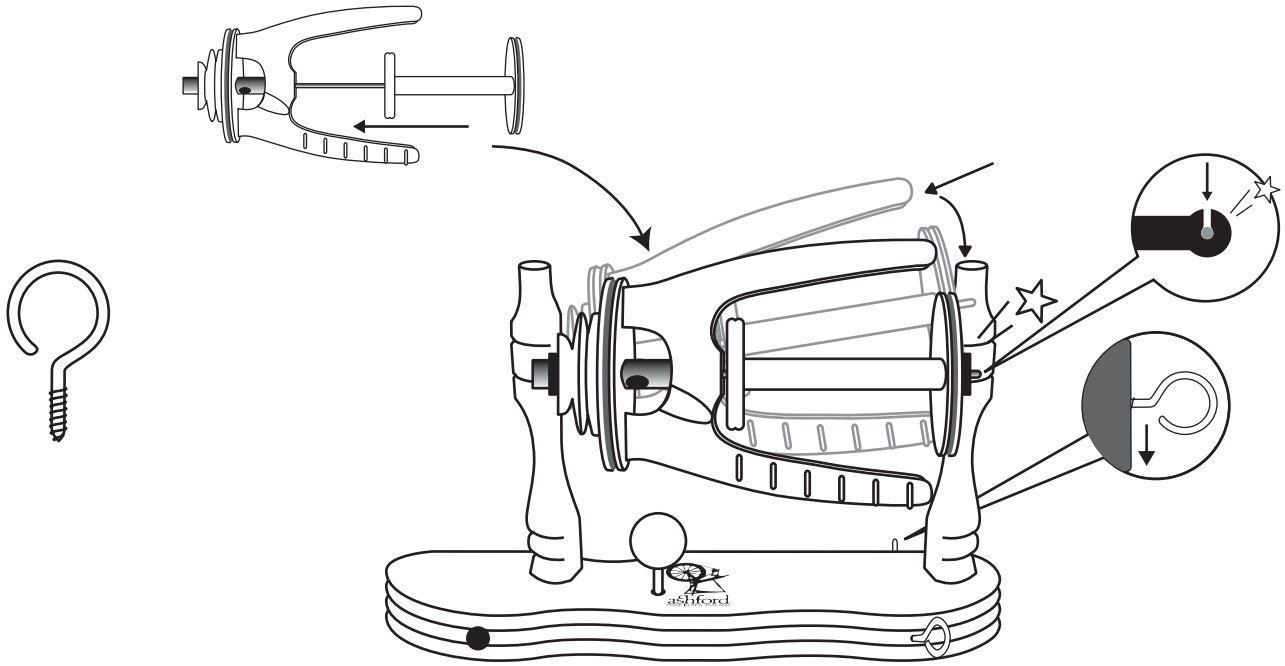
ashford

6

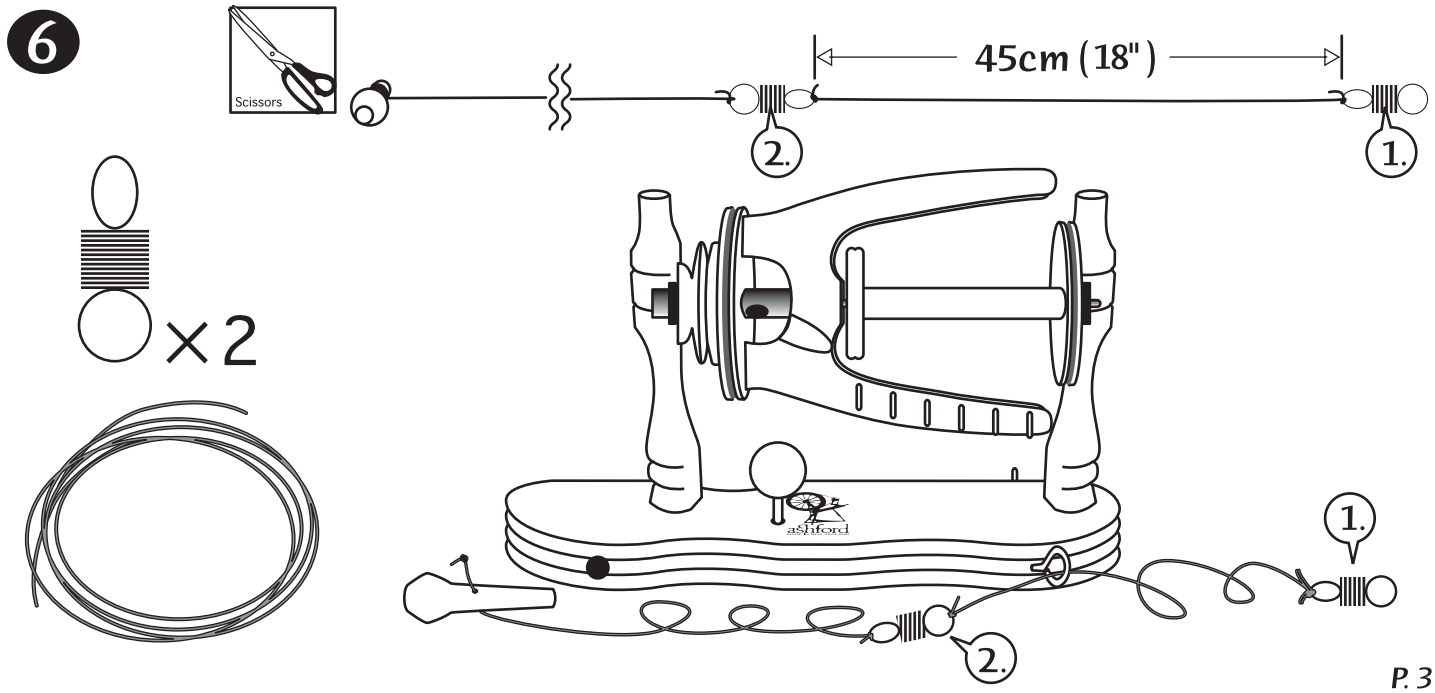
Scissors
45cm (18")
2.
1.
×2
ashford
1.
2.

7

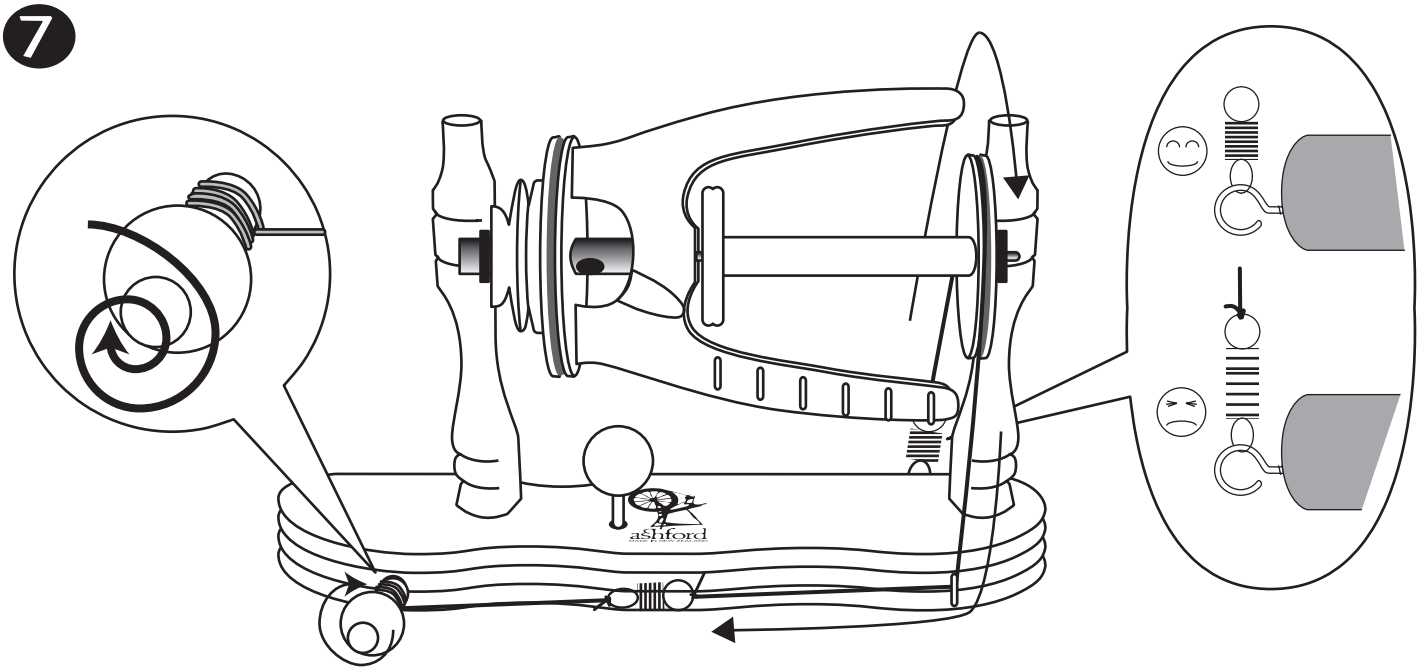
ashford

8

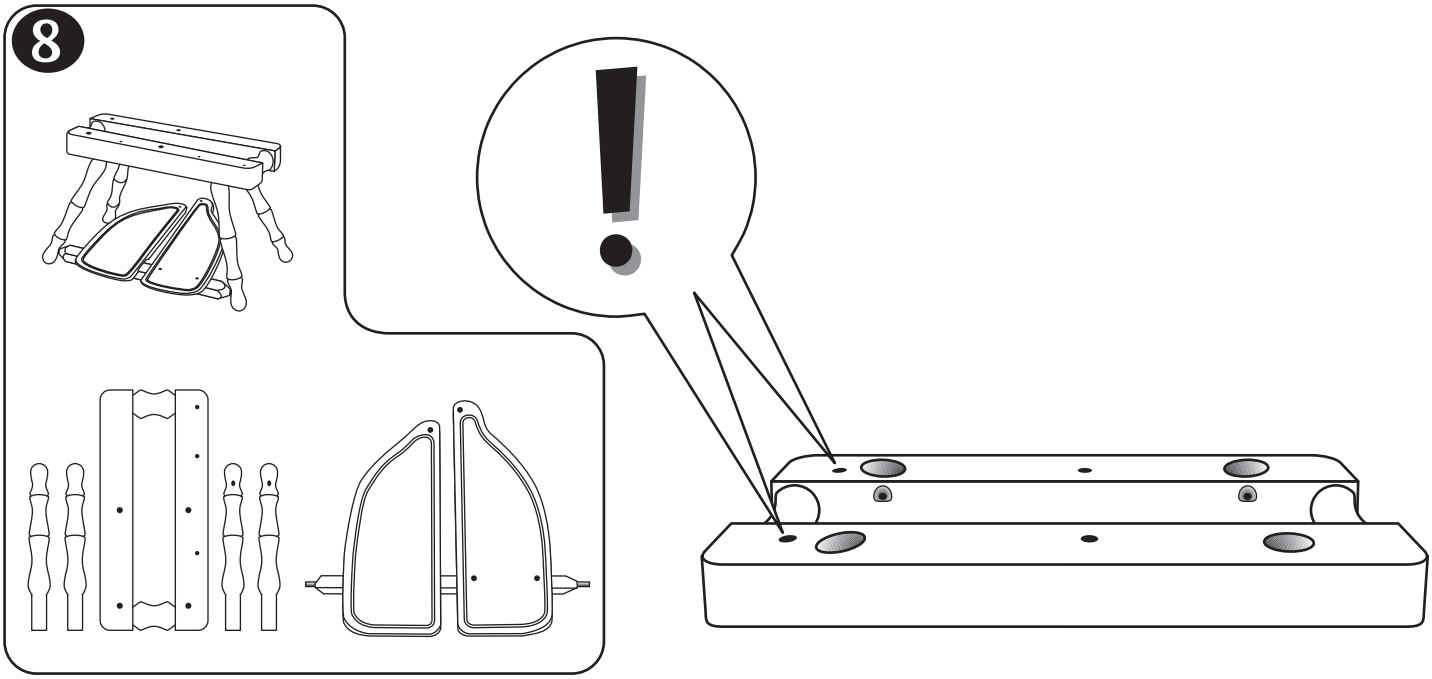

9

CANDLE WAX

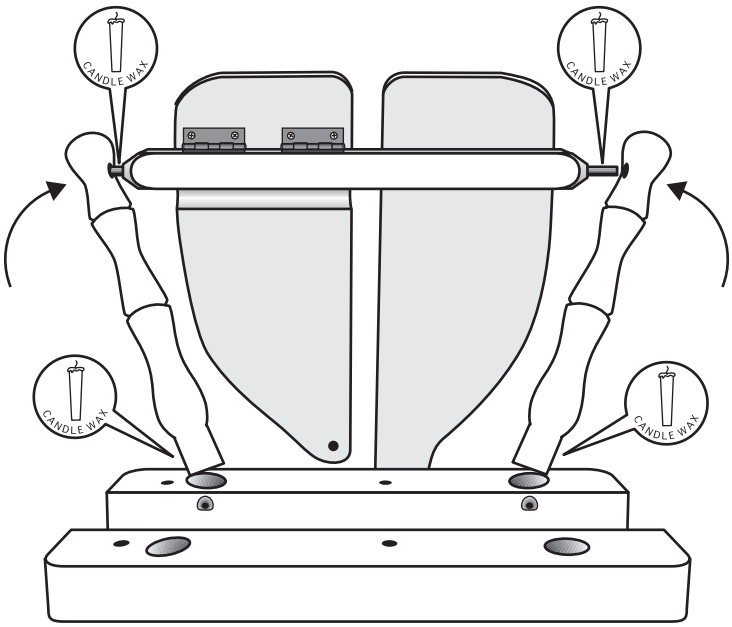
CANDLE WAX
CANDLE WAX
CANDLE WAX
CANDLE WAX

10

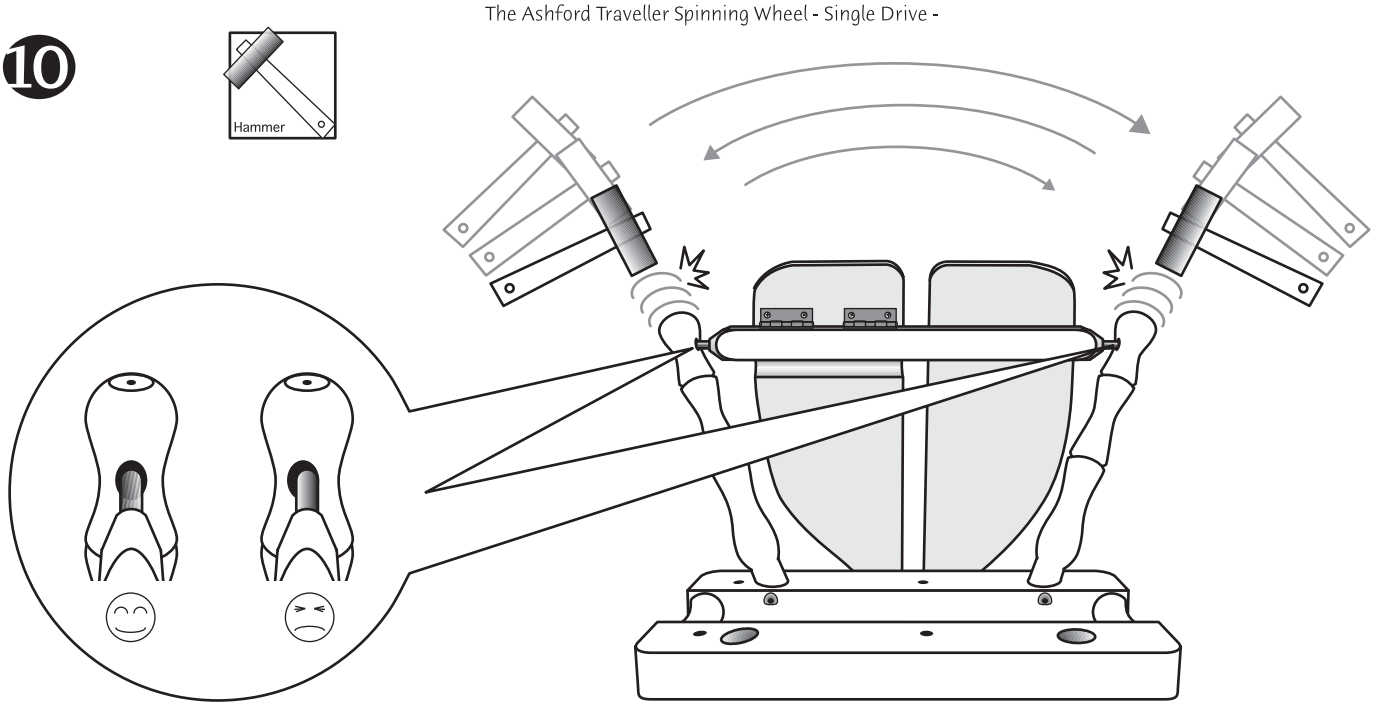
Hammer

11

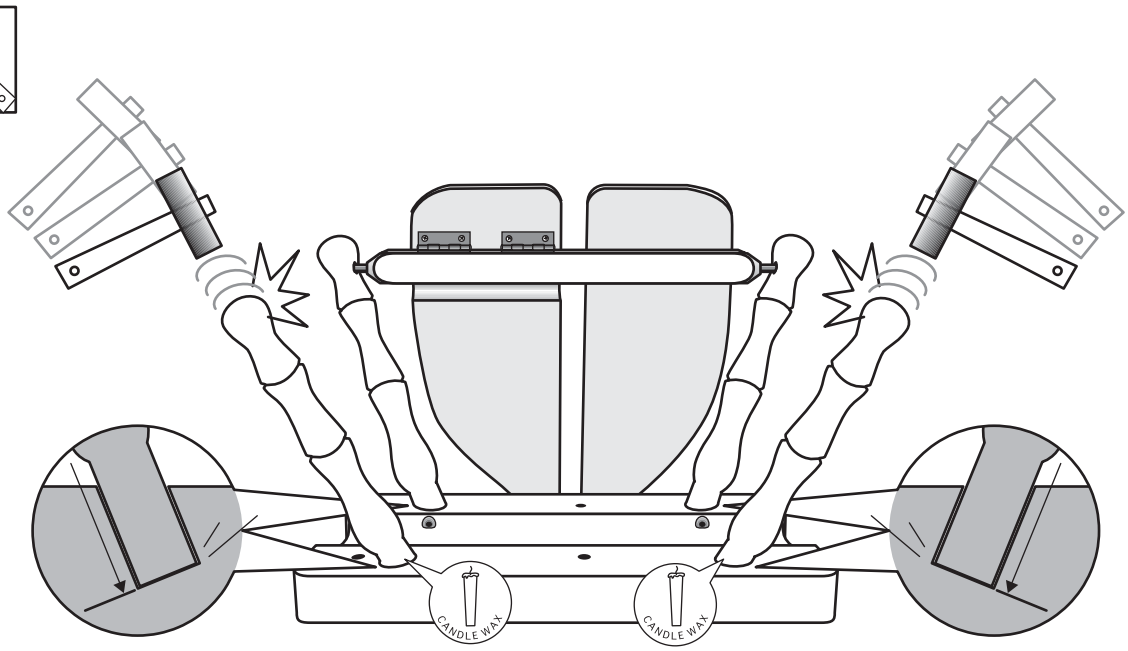
Hammer
CANDLE WAX
CANDLE WAX

12

CANDLE WAX
Screwdriver

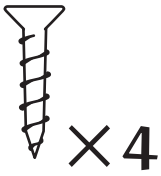
×4

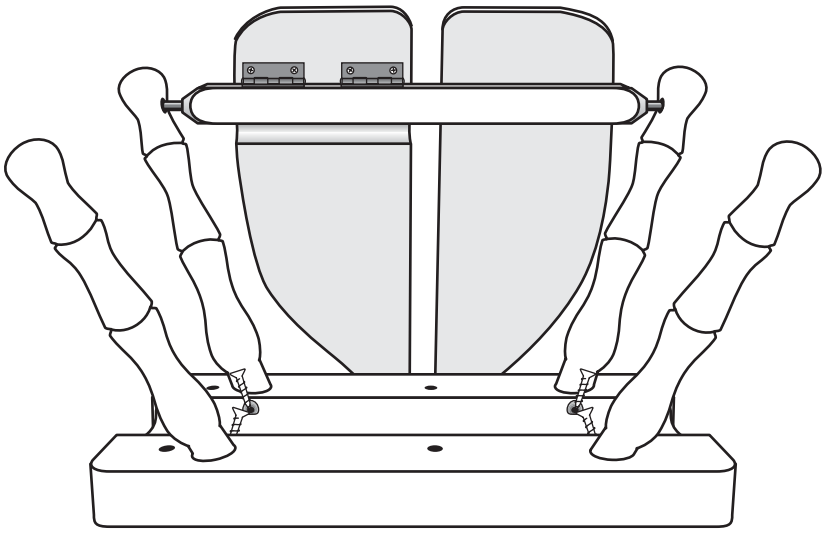

13

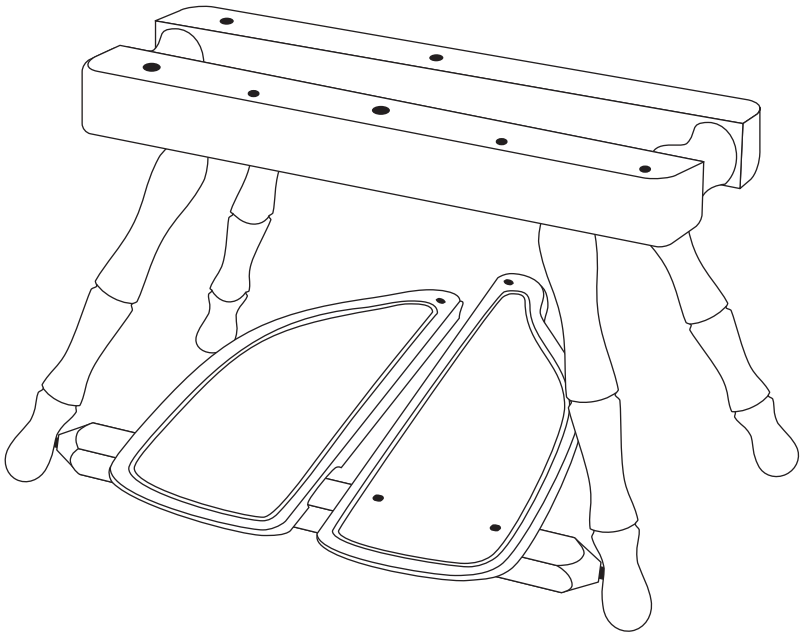

14

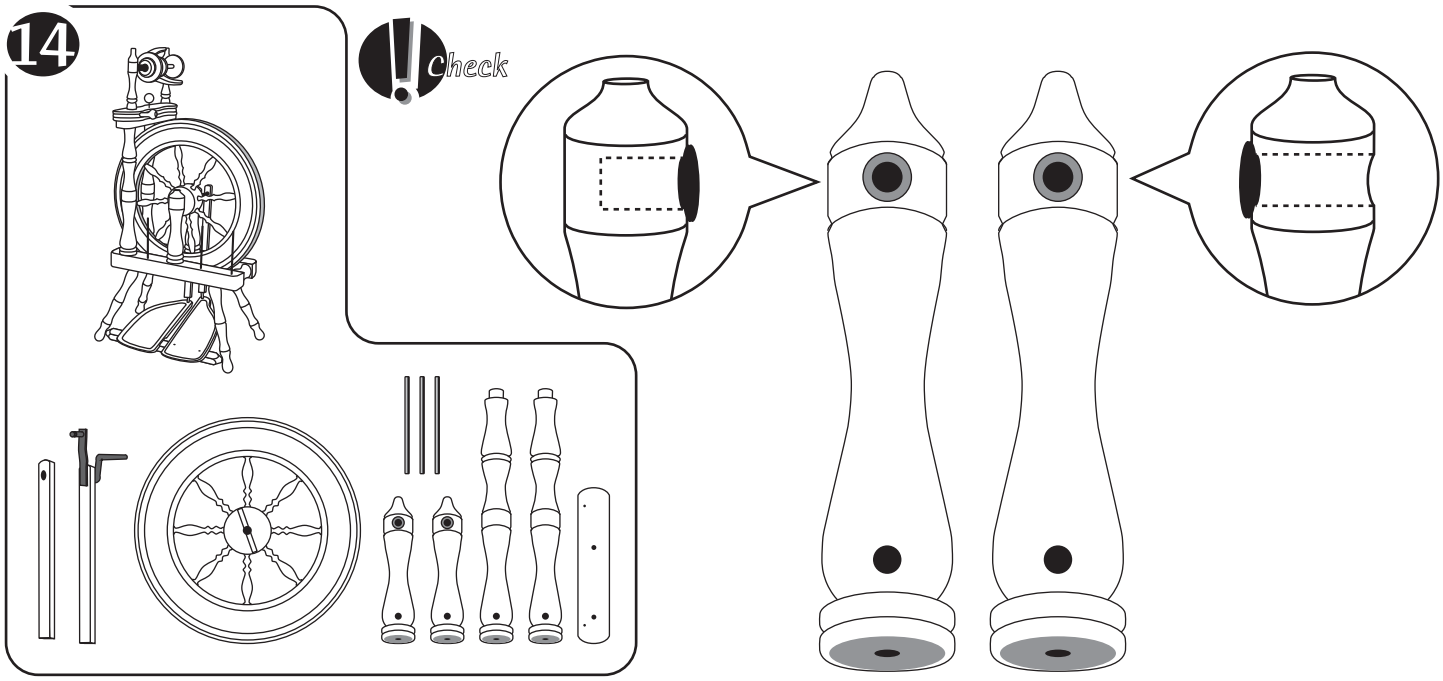

15

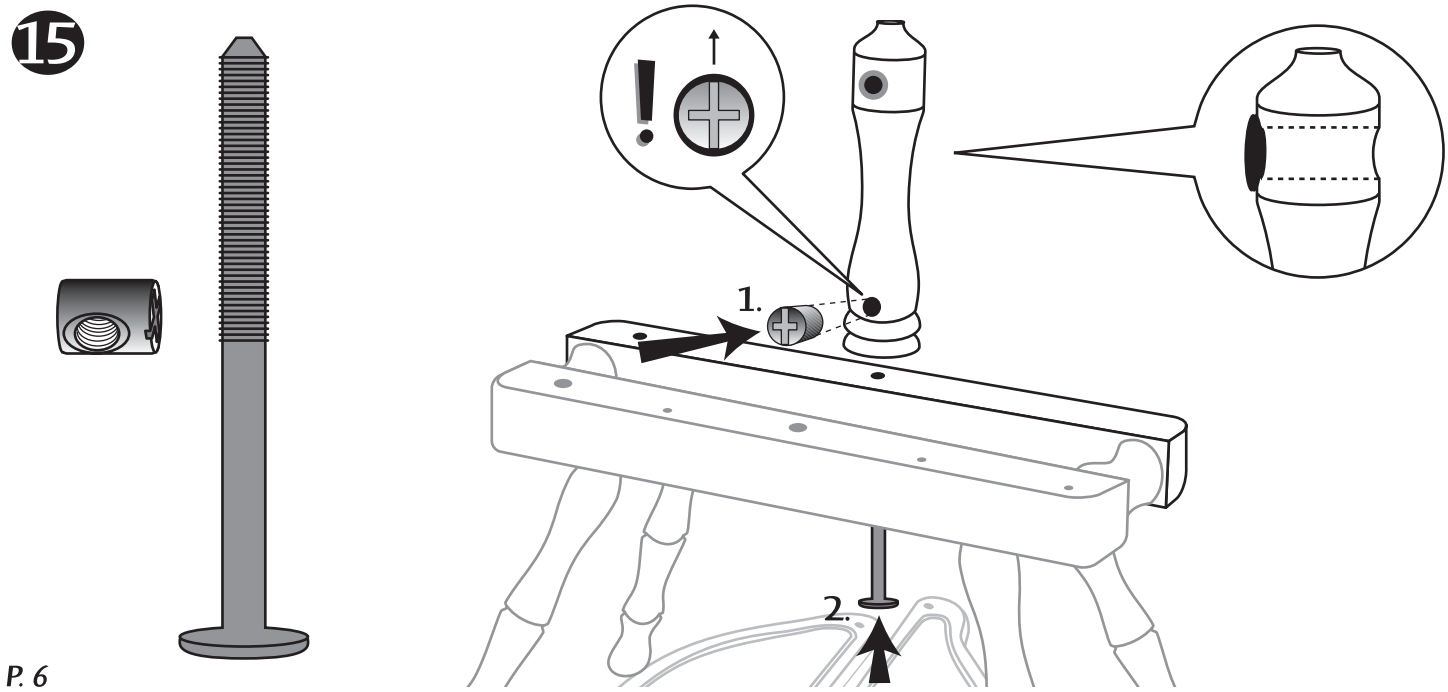

16

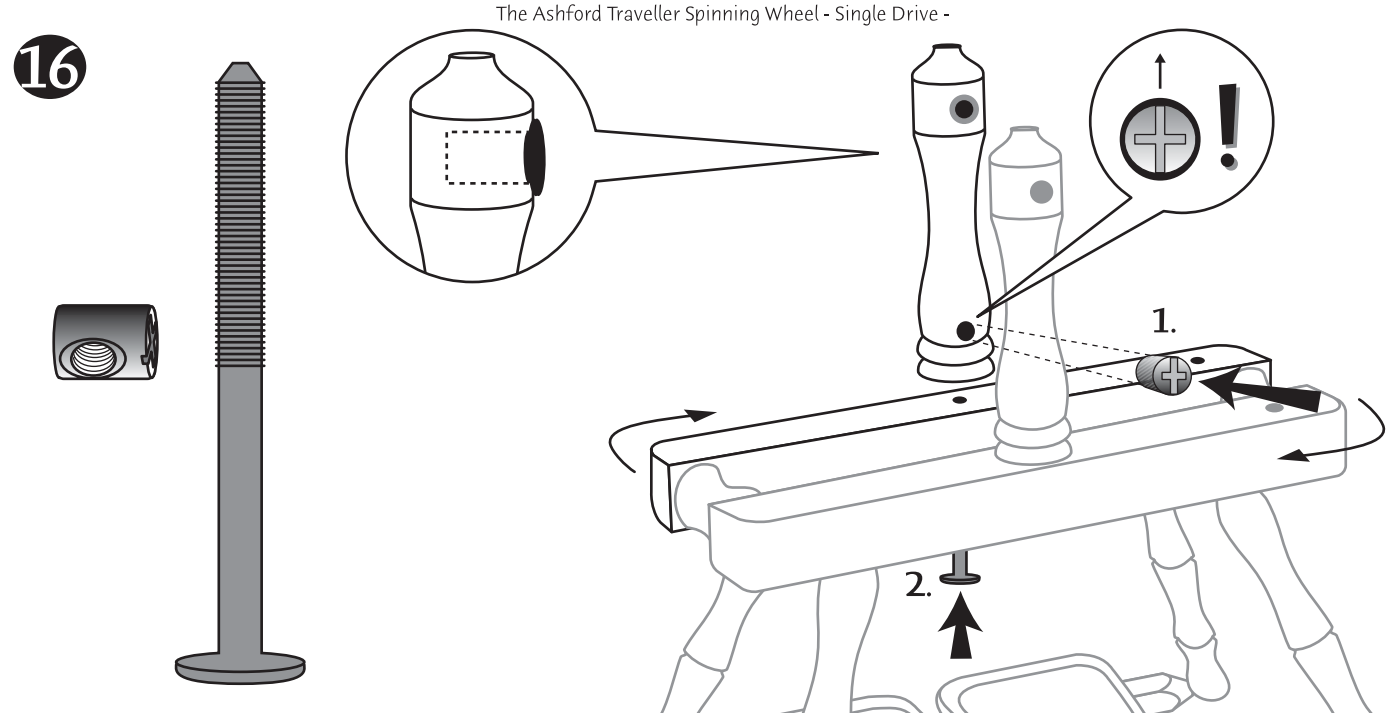

17

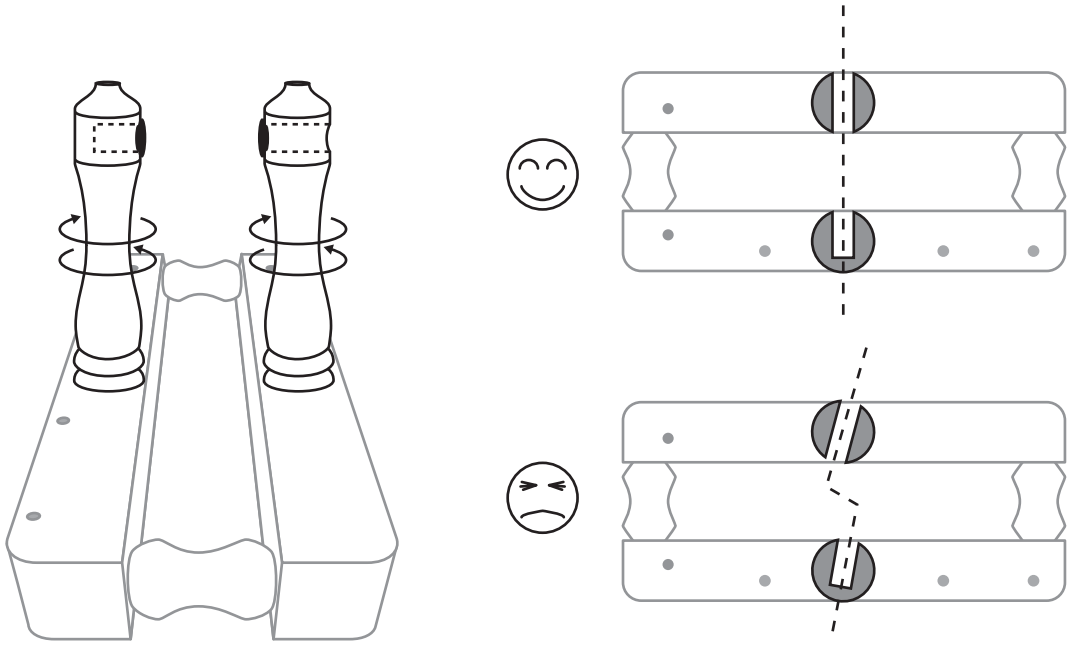

18

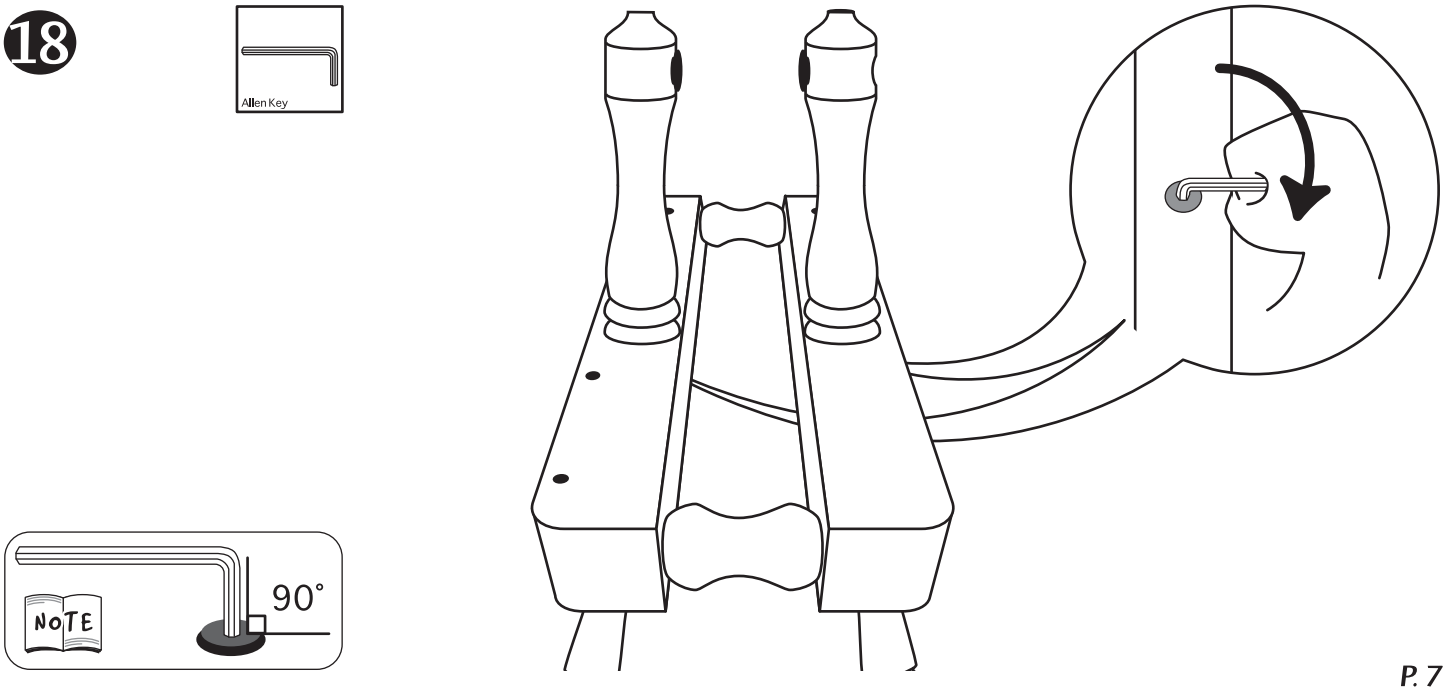

19

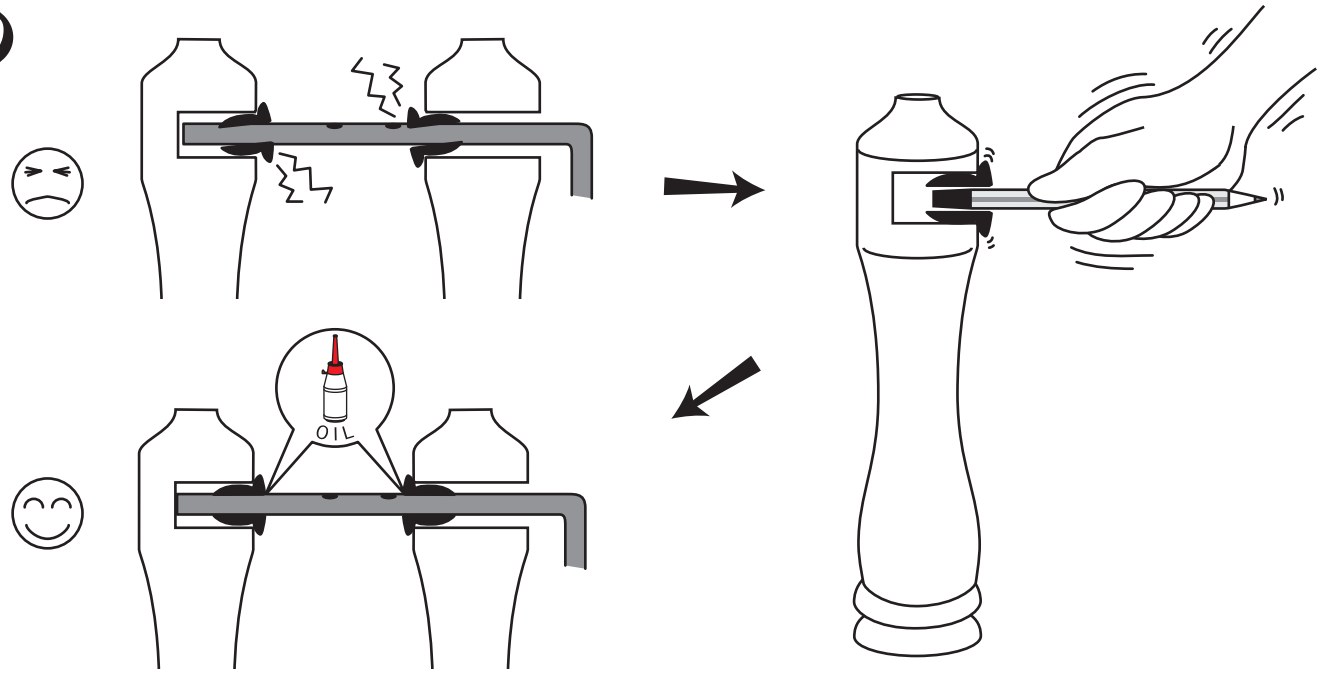

20

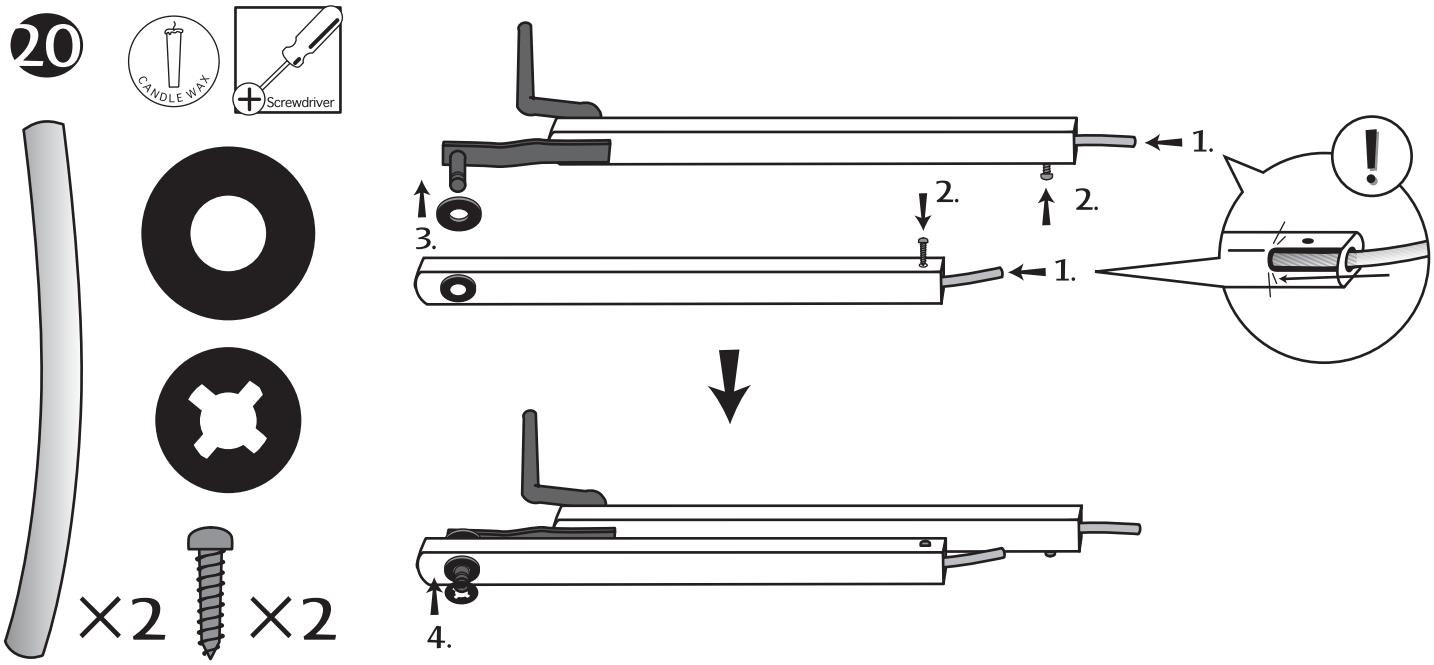

21

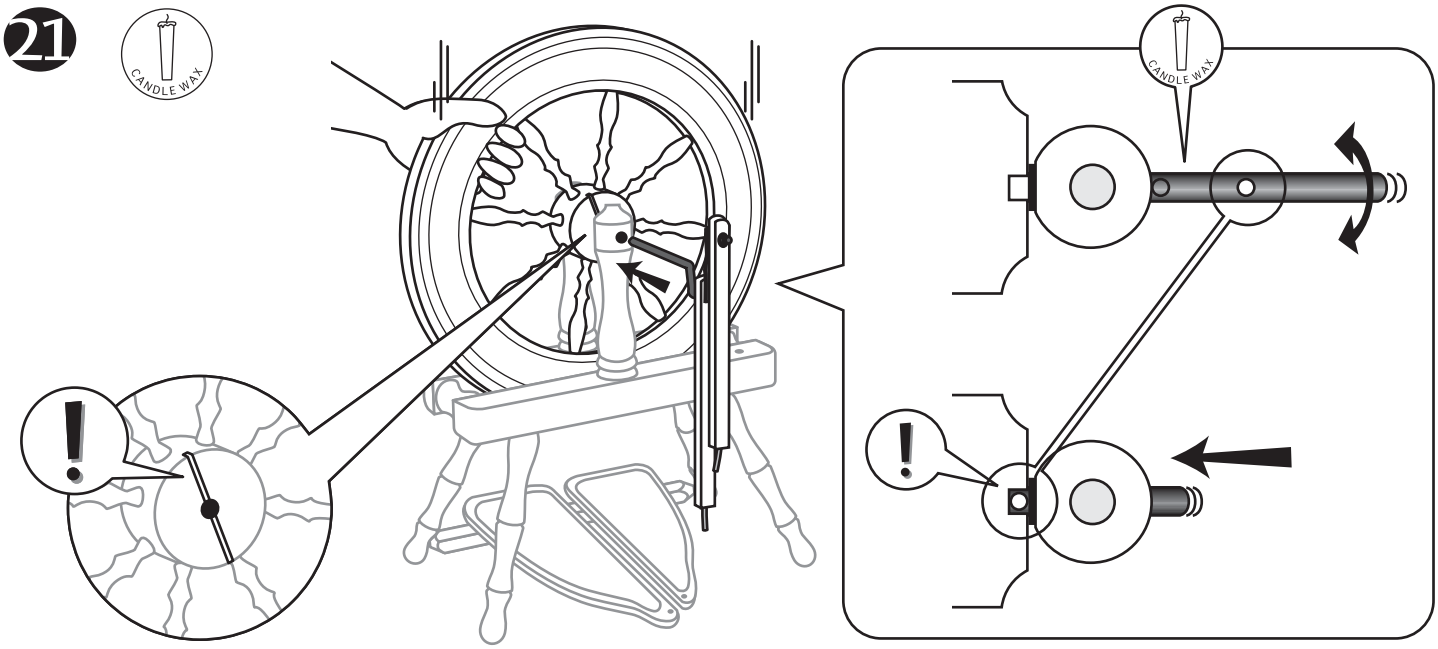

22

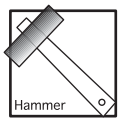

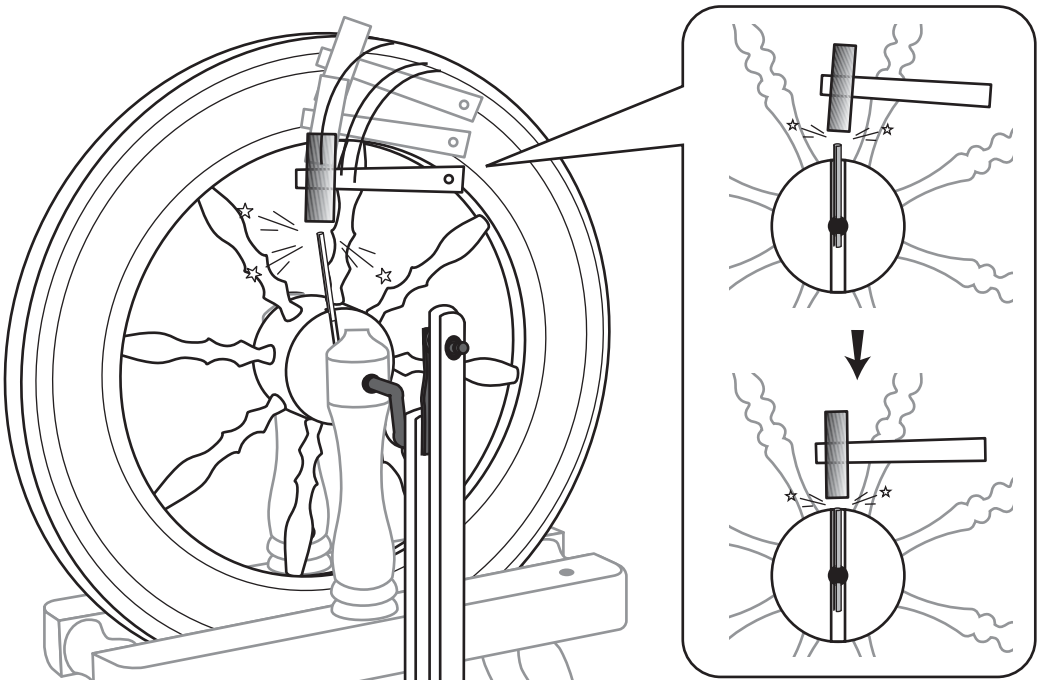

23

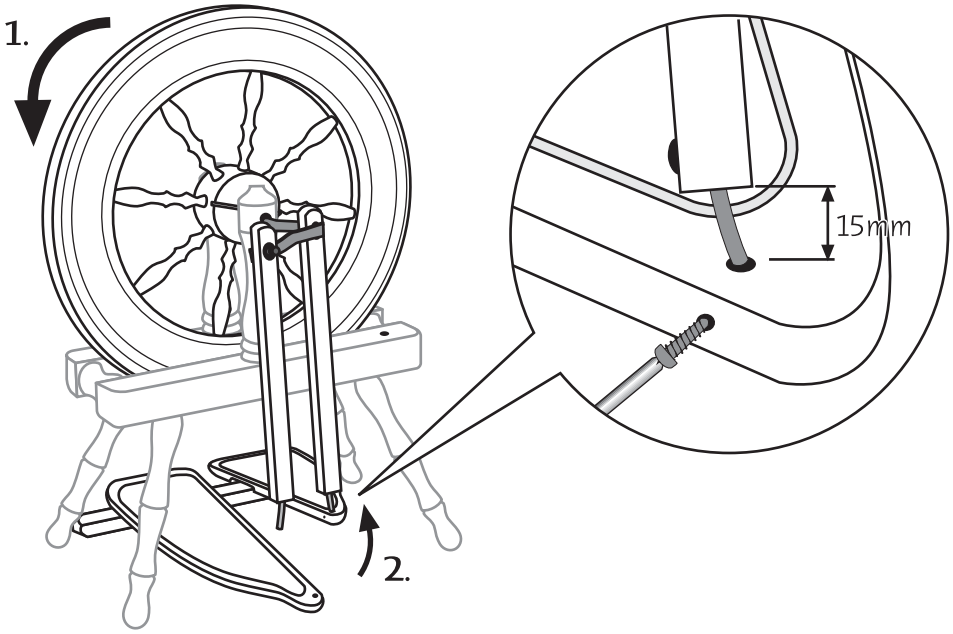

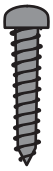

×2

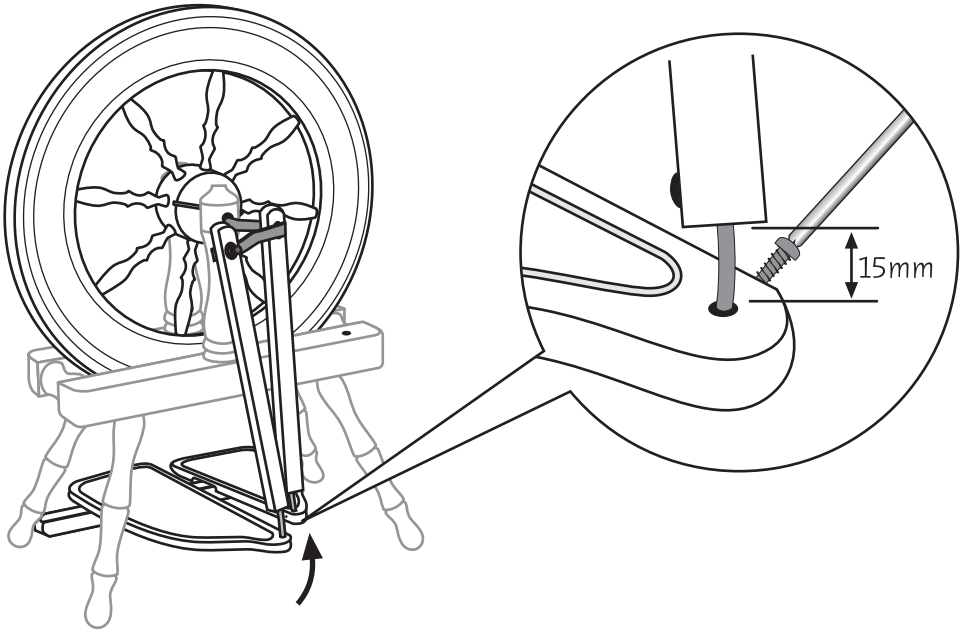

24

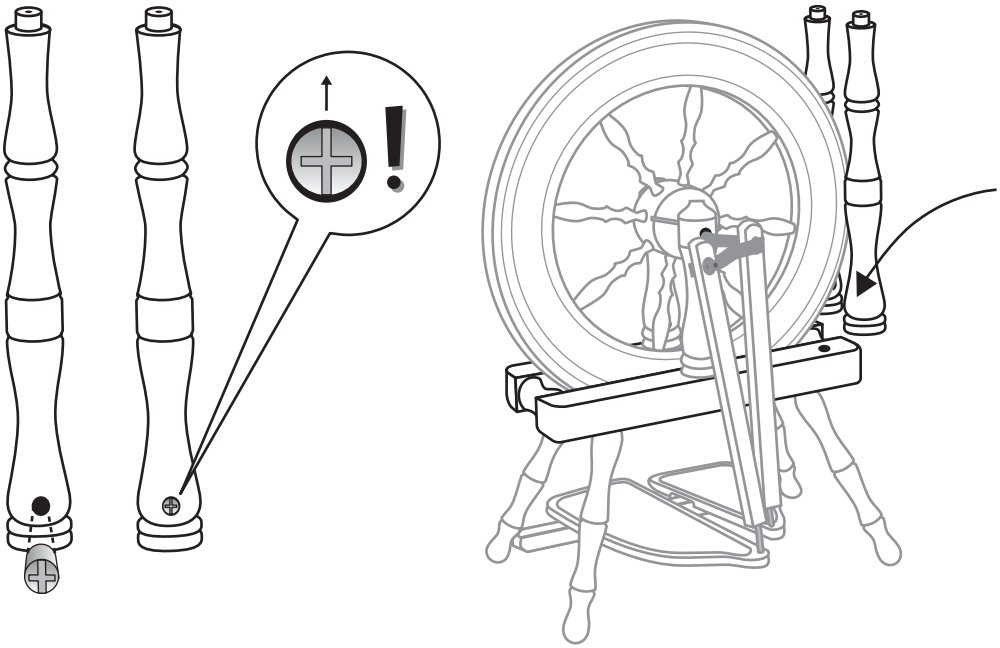

25

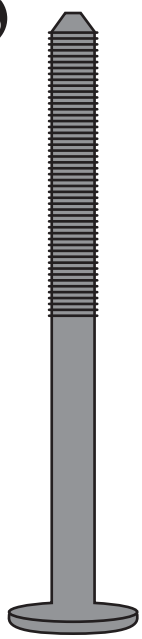

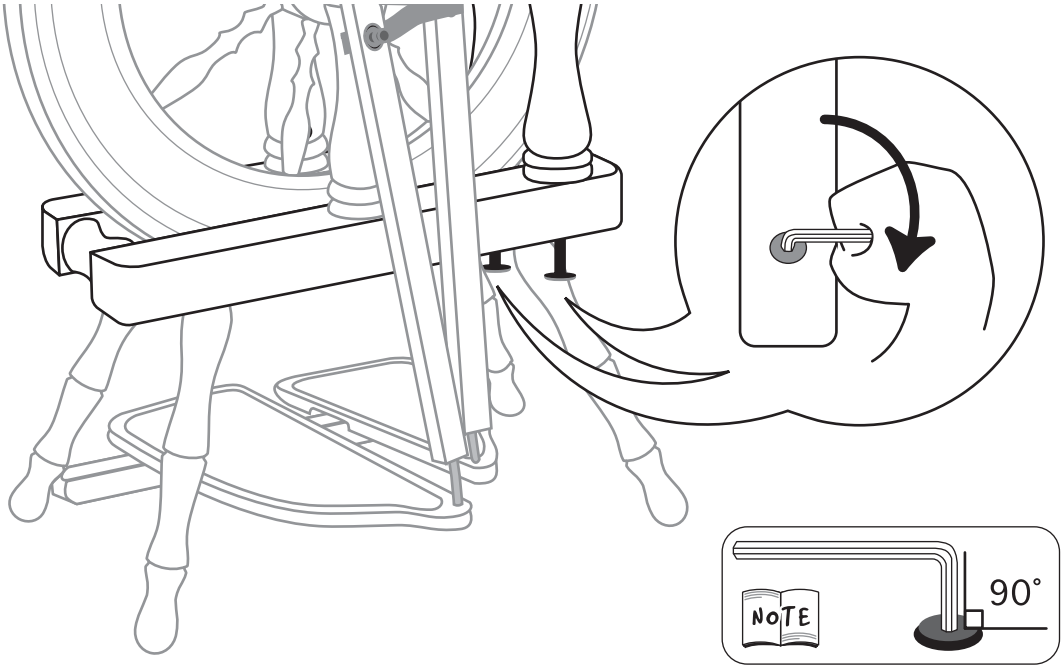

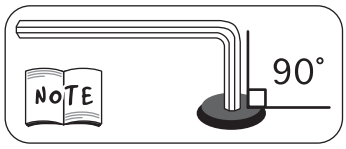

26

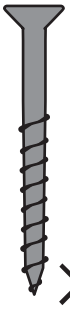

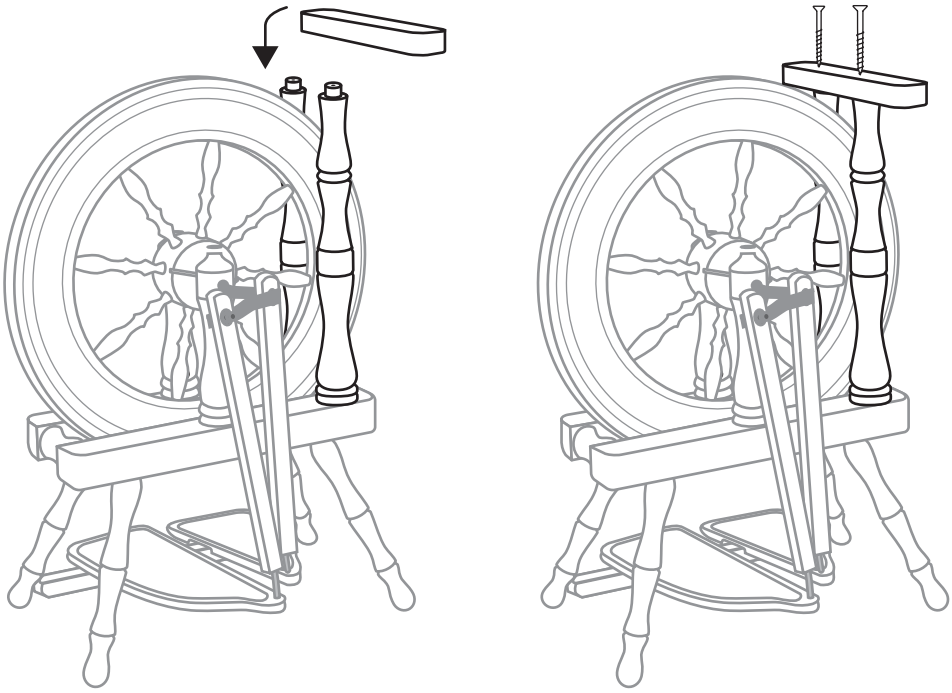

27

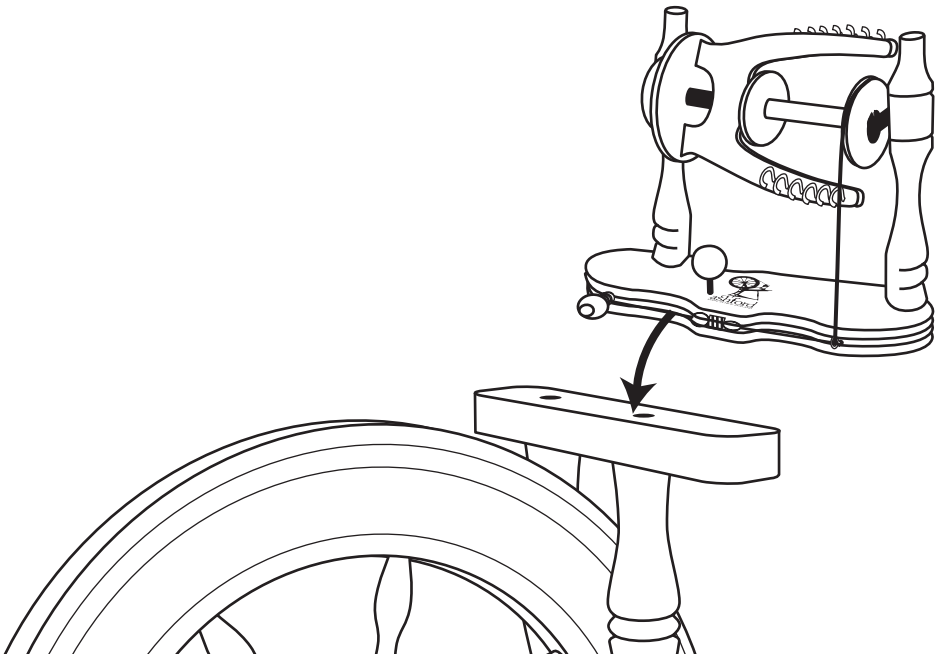

×2

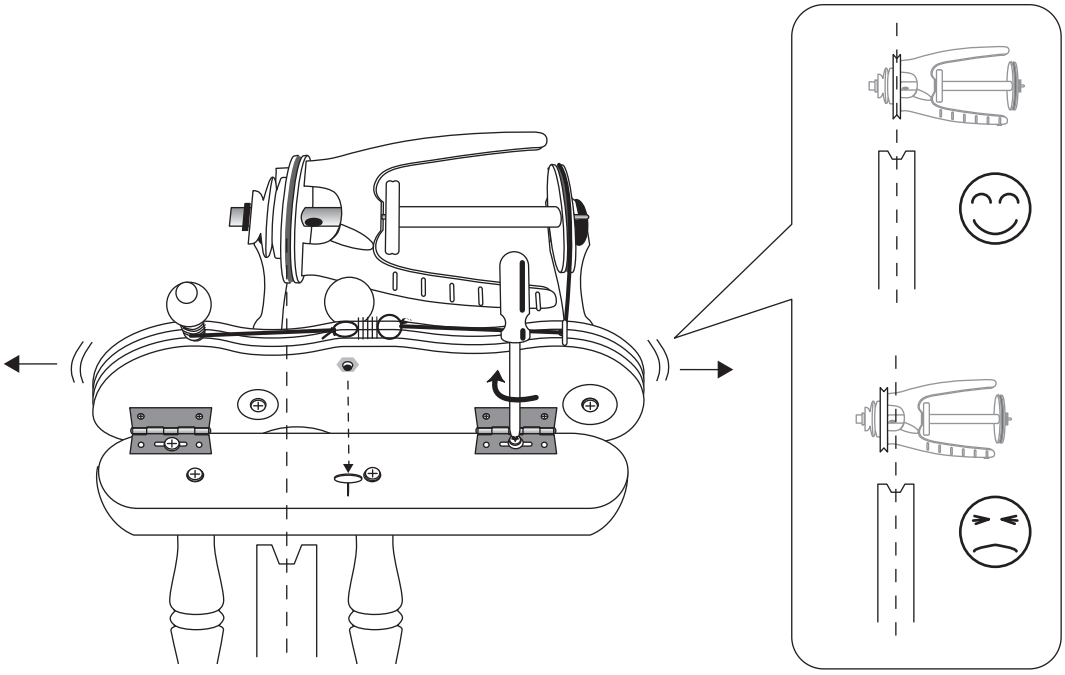

28

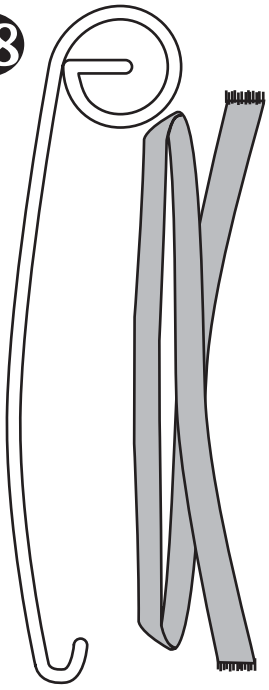

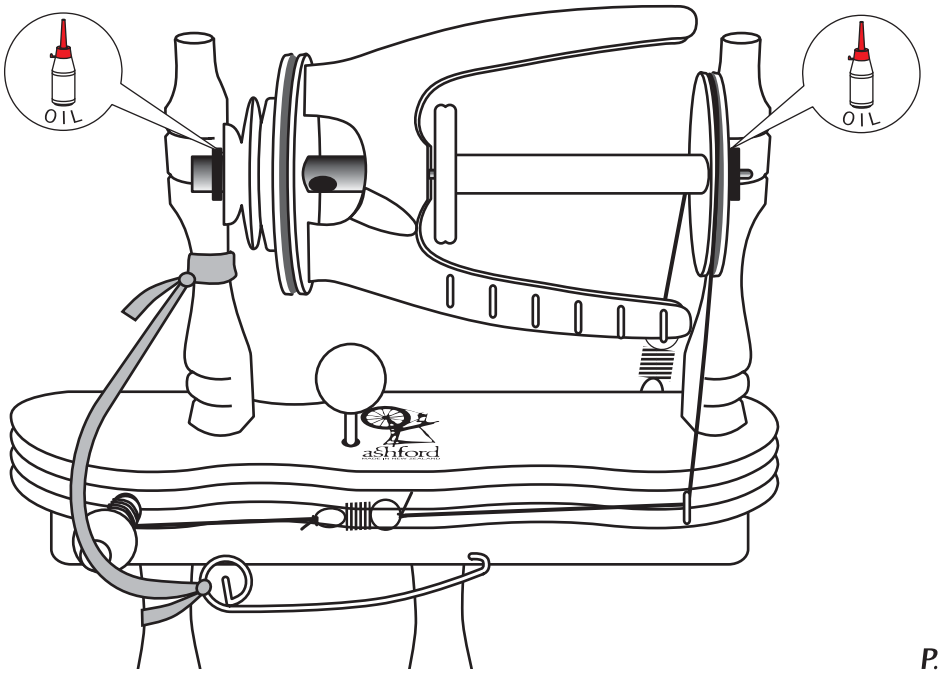

29

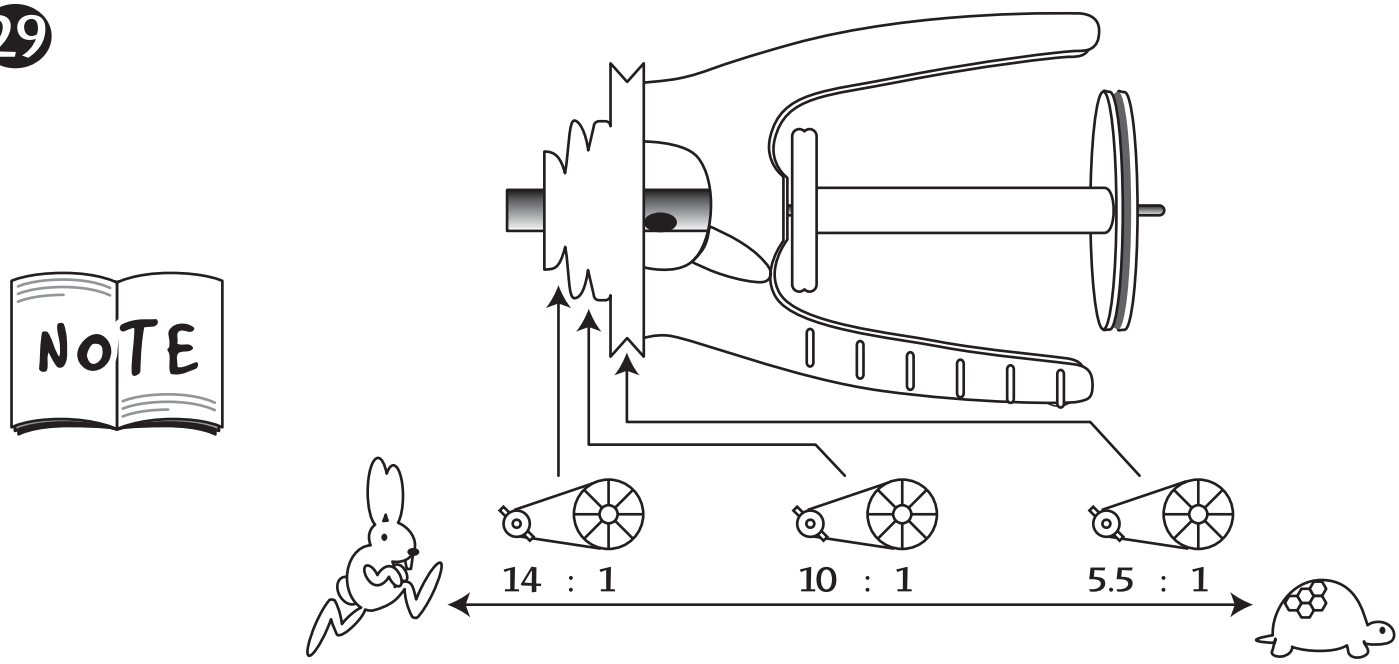

30

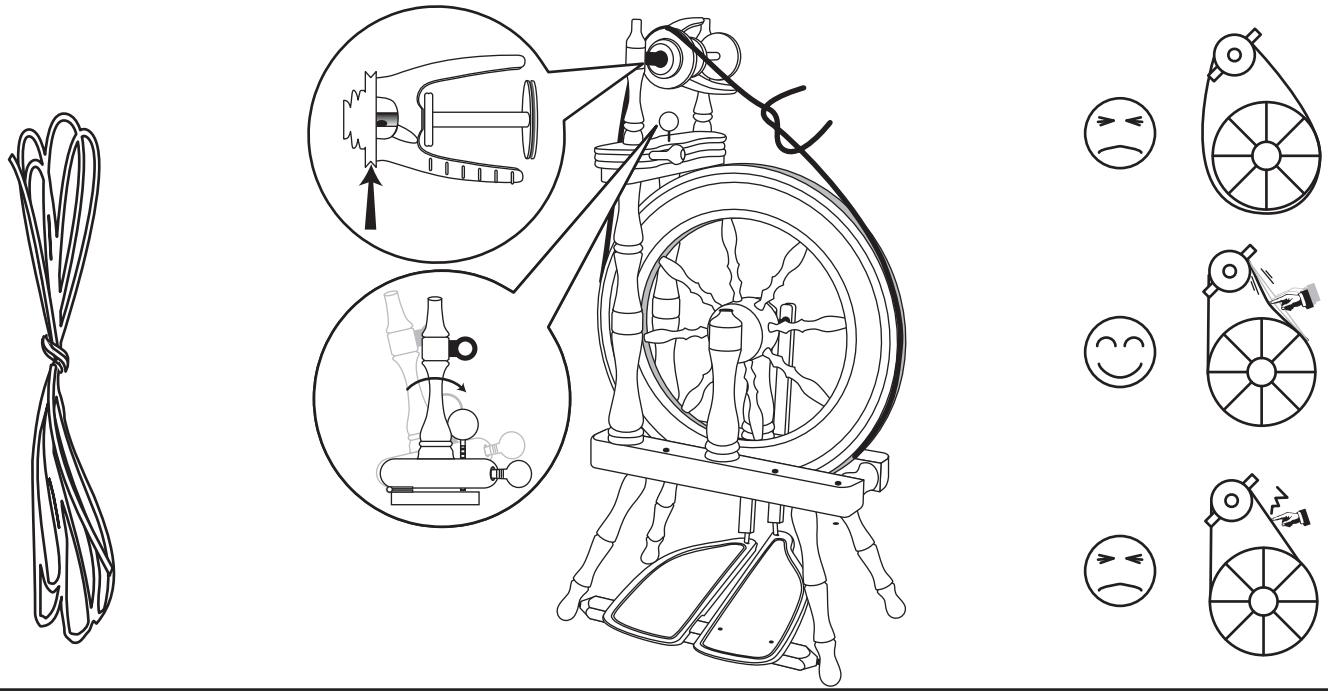

31

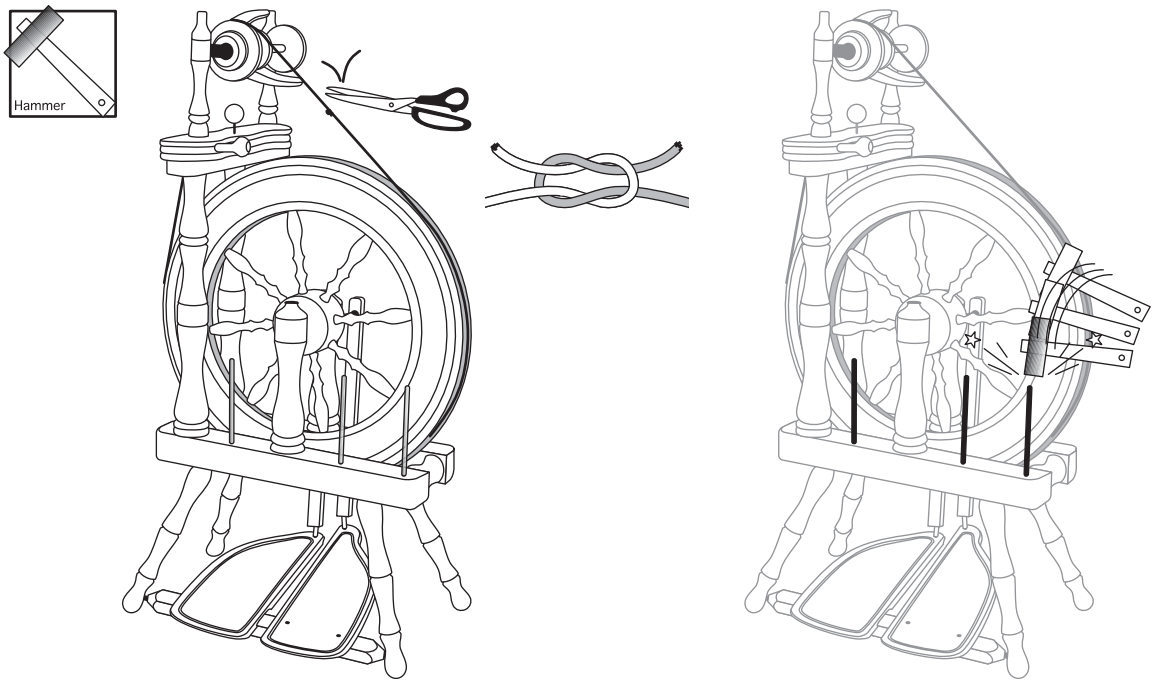

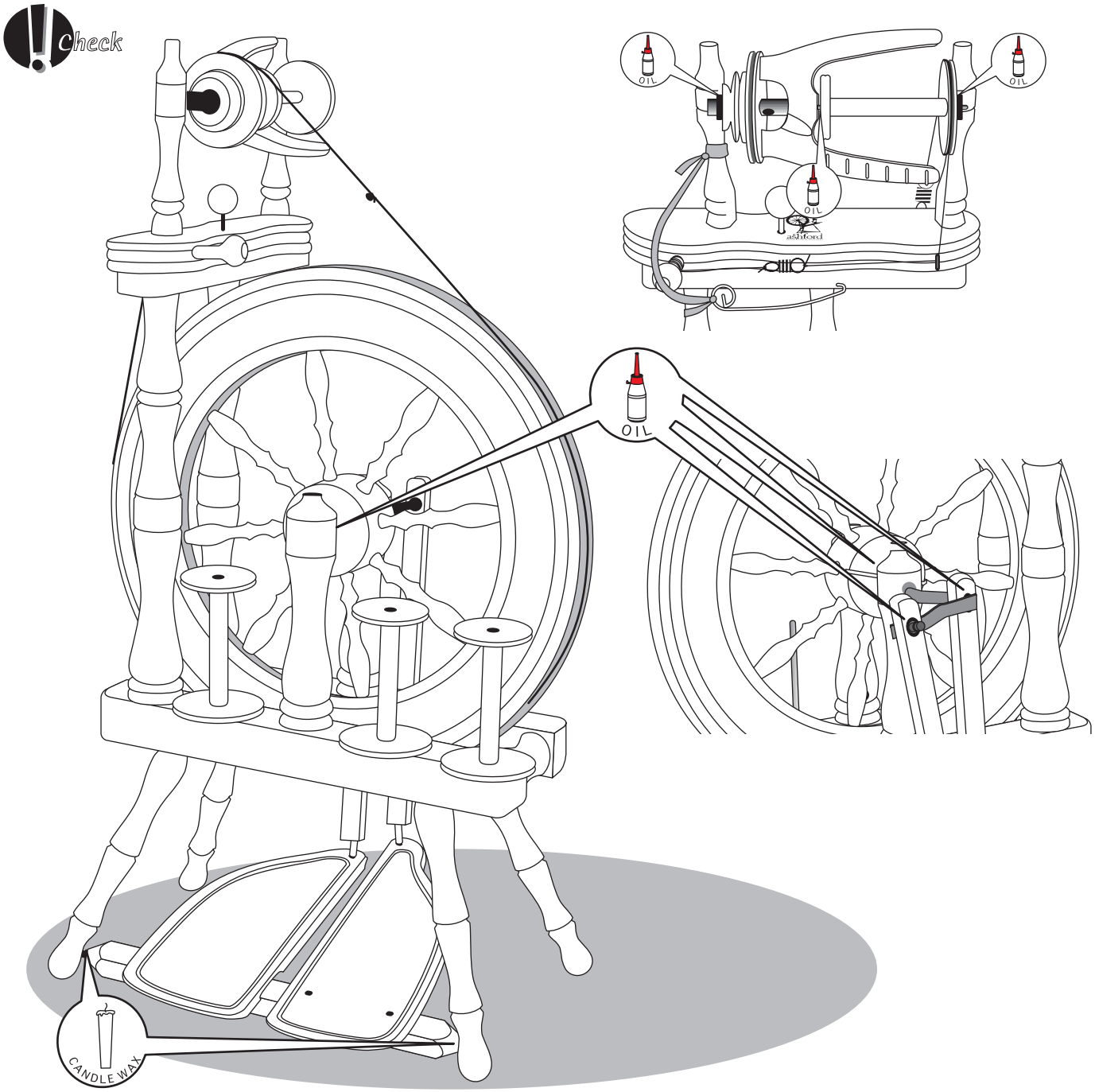
Check
OIL
OIL
OIL
ashford
OIL
CANDLE WAX

Does not pull yarn in

Brake band tension is too loose.

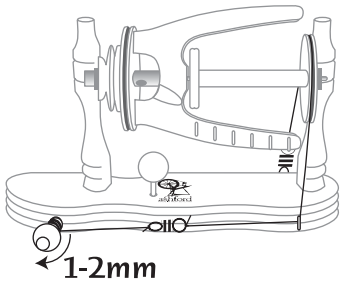

Or →

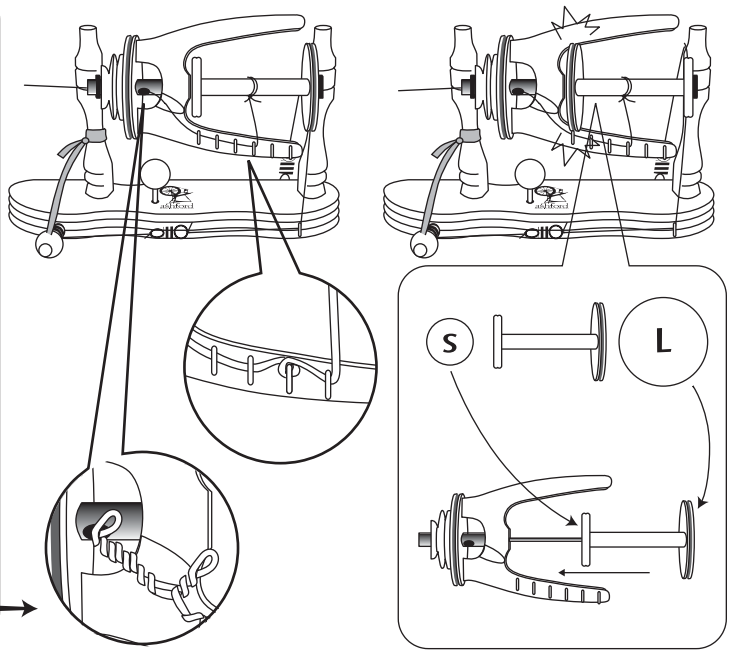

Yarn breaks

Brake band tension is too tight.

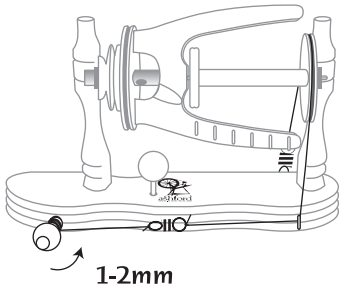

Or →

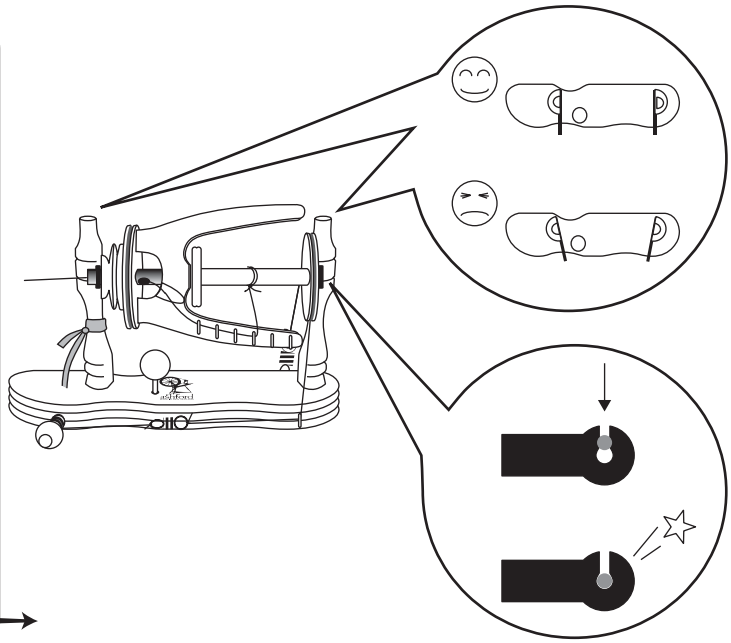

Hard to Treadle

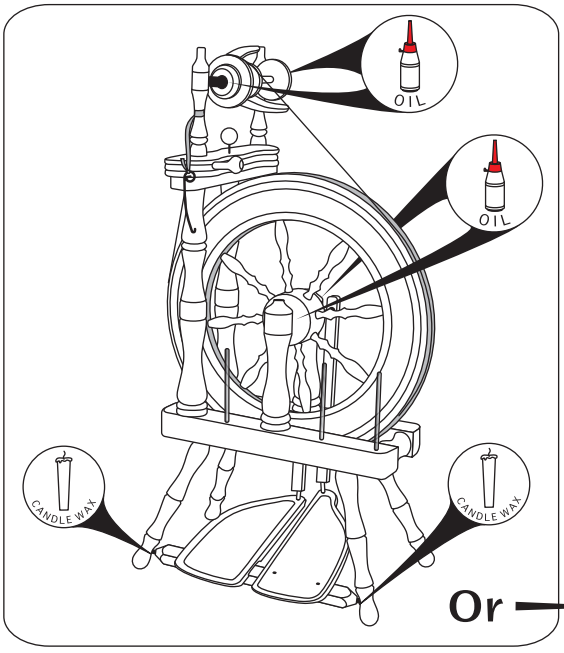

Or →

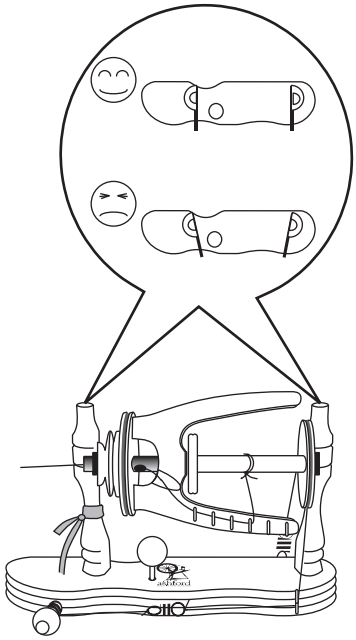

Drive band falls off easily

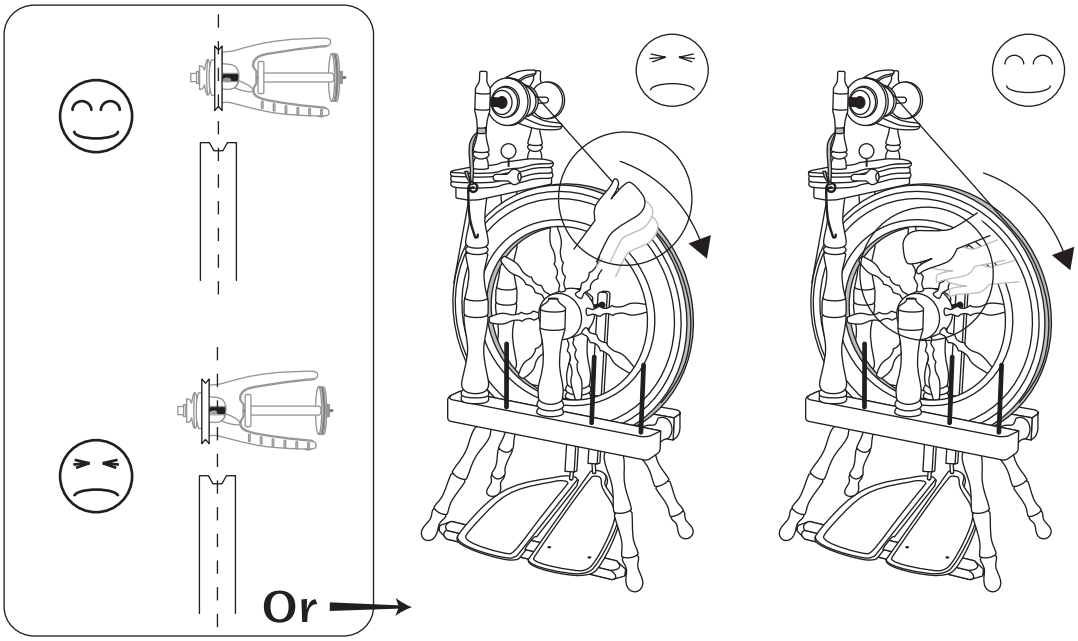

Strange sounds

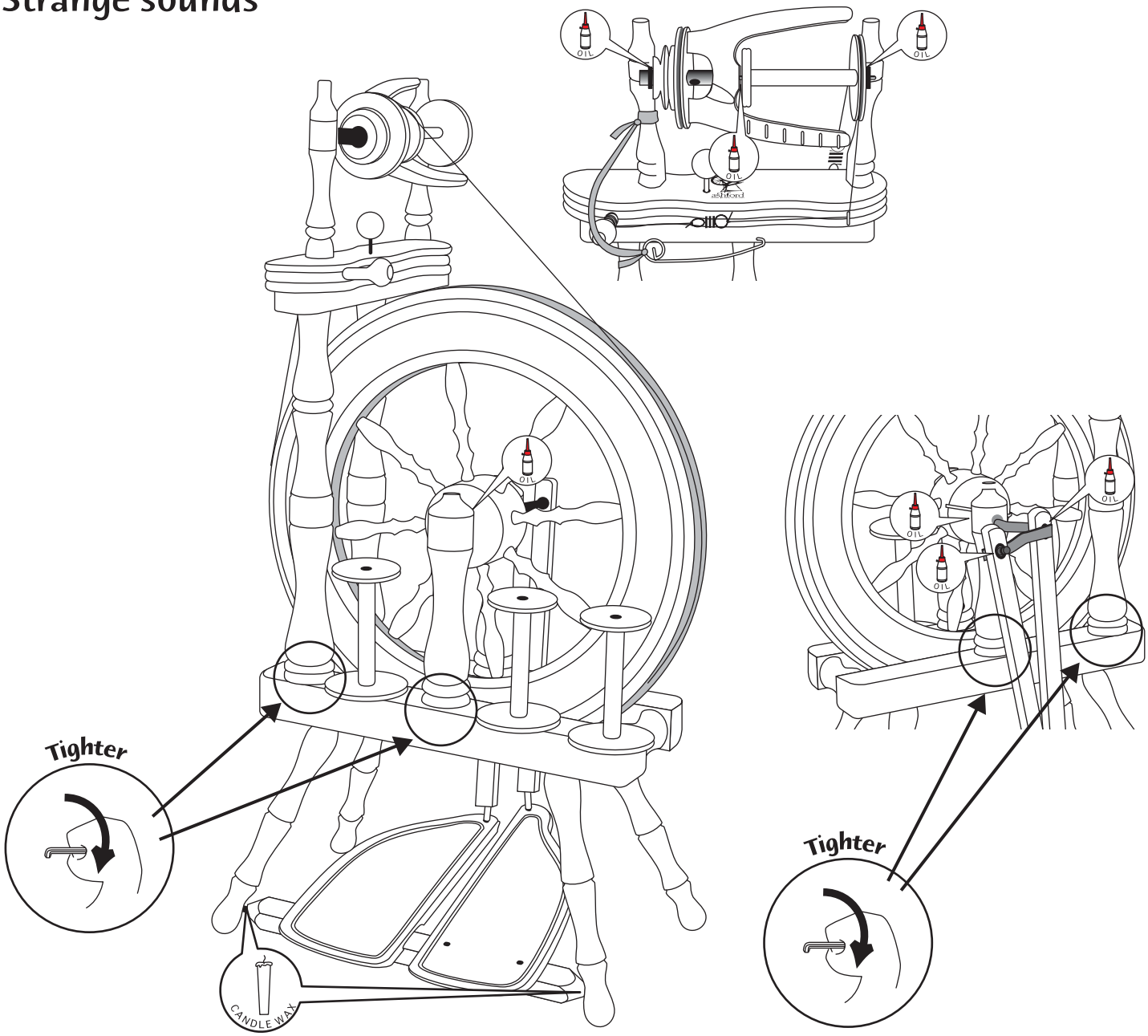

Real Scale Hardware Samples

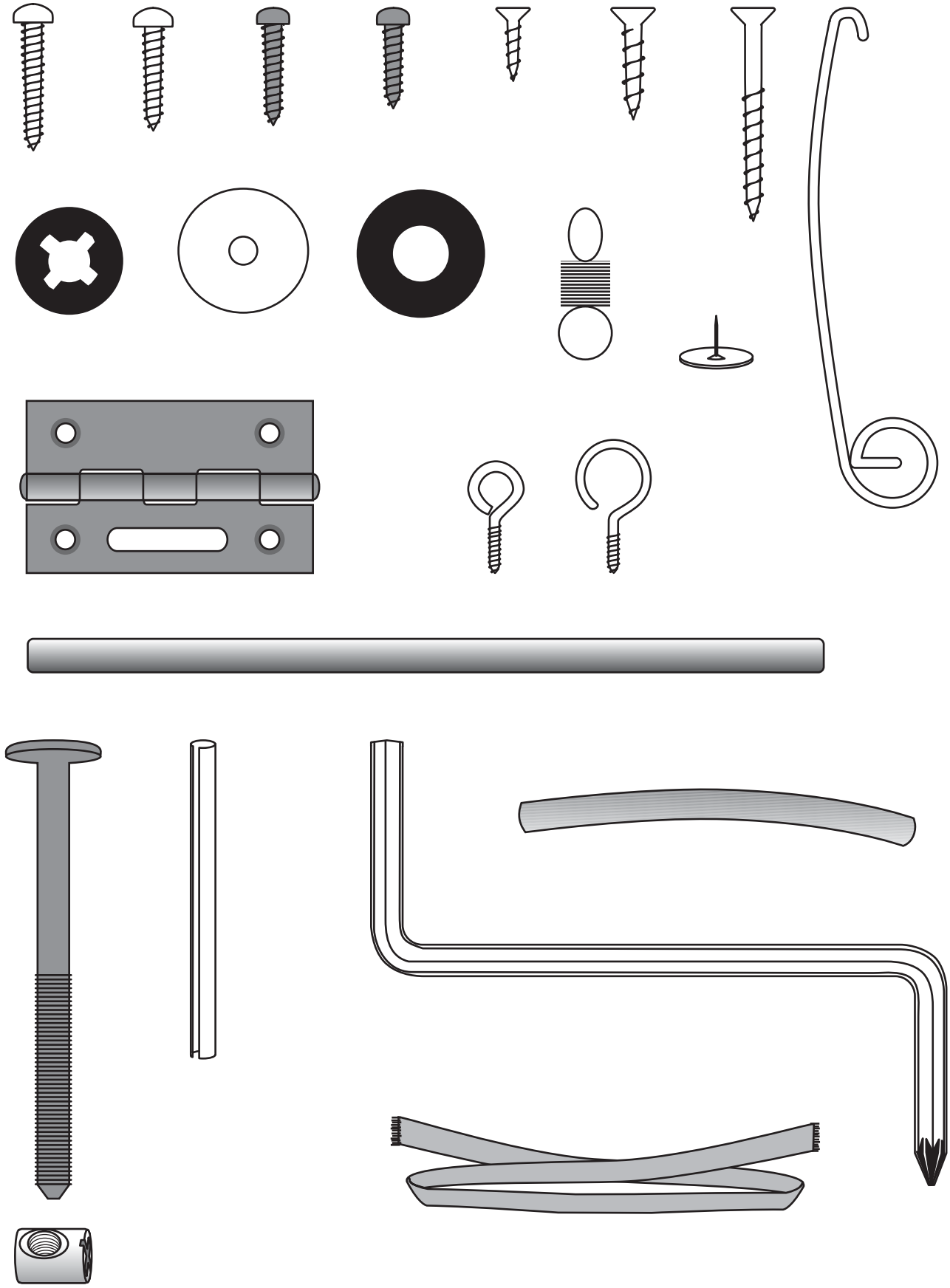

Traveller Single Drive Spinning Wheel - Parts List

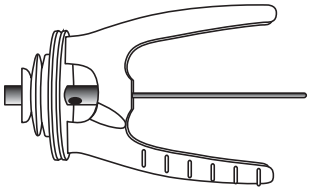

Flyer

Maiden Bar

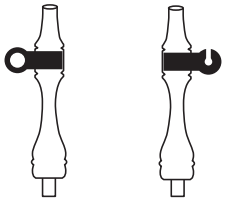

Maid Uprights

Adjusting Knob

Tension Knob

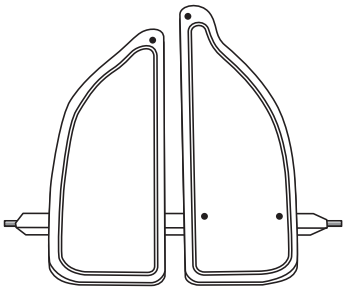

Treadle Assembly

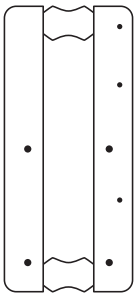

Base

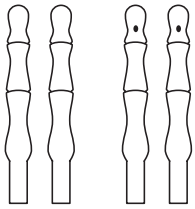

Legs - 2 with holes & 2 without

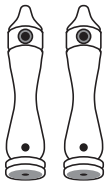

Wheel Supports

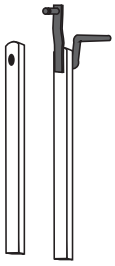

Conrods

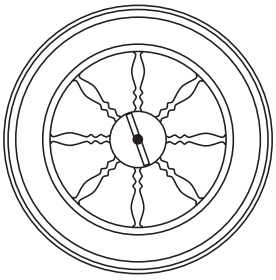

Wheel

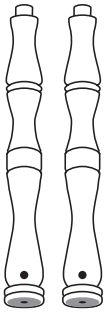

Maiden Bar Supports

Top Rail

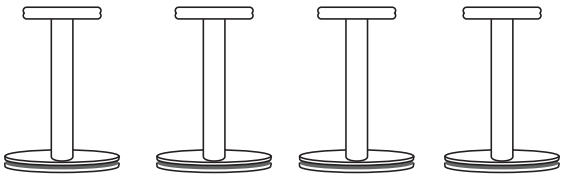

Bobbins
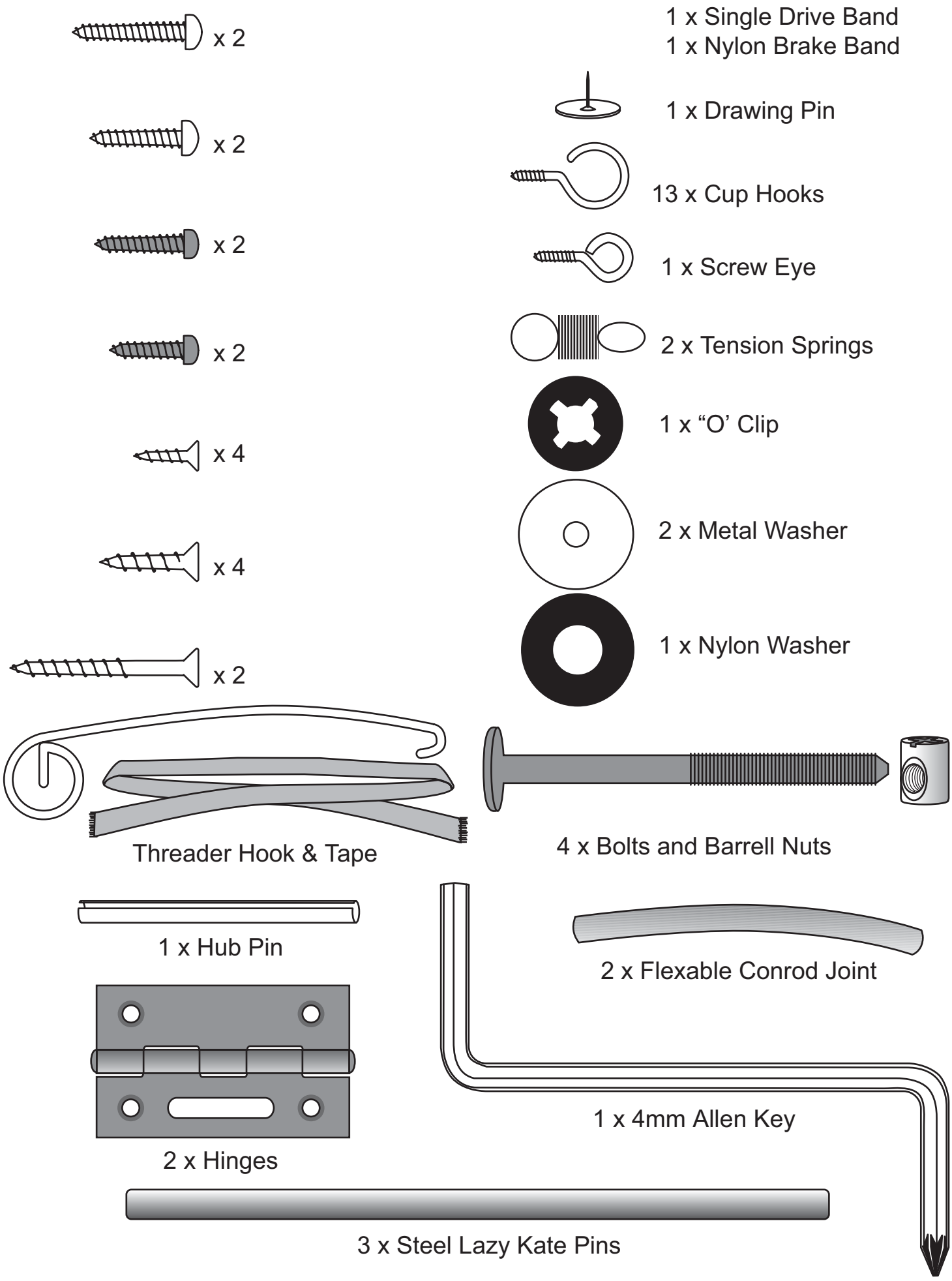
Traveller Single Drive Spinning Wheel - Hardware List